Built-Under Double Oven

LAM4406

User Manual

LAMONA

Exclusive to Howdens Joinery Co.

Register my appliance www.howdens.com/appliance-registration

Register my appliance

Register your Lamona appliance purchased from Howdens Joinery to allow us to easily contact you in the event of important product updates at:

www.howdens.com/appliance-registration

LAMONA

Exclusive to Howdens Joinery Co.

See back page for product serial number

Contents

Safety information	4
Safety instructions	5
Product description	8
Control panel	9
Before first use	10
Daily use	11
Clock functions	13
Using the accessories	16
Additional functions	19
Hints and tips	21
Care and cleaning	29
Troubleshooting	33
Energy efficiency	34
Your guarantee	36

Subject to change without notice.

⚠ Safety information

Before the installation and use of the appliance, carefully read the supplied instructions. The manufacturer is not responsible for any injuries or damages that are the result of incorrect installation or usage. Always keep the instructions in a safe and accessible location for future reference.

Children and vulnerable people safety

- This appliance can be used by children aged from 8 years and above and persons with reduced physical, sensory or mental capabilities or lack of experience and knowledge if they have been given supervision or instruction concerning the use of the appliance in a safe way and understand the hazards involved.
- Children between 3 and 8 years of age and persons with very extensive and complex disabilities shall be kept away unless continuously supervised.
- Children of less than 3 years of age should be kept away unless continuously supervised.
- Do not let children play with the appliance.
- Keep all packaging away from children and dispose of it appropriately.
- Keep children and pets away from the appliance when it operates or when it cools down. Accessible parts are hot.
- If the appliance has a child safety device, it should be activated.
- Children shall not carry out cleaning and user maintenance of the appliance without supervision.

General Safety

- Only a qualified person must install this appliance and replace the cable.
- The control panel must be connected to specified heating unit with matching colours of connectors, to avoid possible hazard.

- WARNING: The appliance and its accessible parts become hot during use. Care should be taken to avoid touching heating elements.
- Always use oven gloves to remove or put in accessories or ovenware.
- Before carrying out any maintenance, disconnect the appliance from the power supply.
- Ensure that the appliance is switched off before replacing the lamp to avoid the possibility of electric shock.
- Do not use a steam cleaner to clean the appliance.
- Do not use harsh abrasive cleaners or sharp metal scrapers to clean the glass door since they can scratch the surface, which may result in shattering of the glass.
- If the mains power supply cable is damaged, it must be replaced by the manufacturer, its Authorised Service Centre or similarly qualified persons to avoid an electrical hazard.
- To remove the shelf supports first pull the front of the shelf support and then the rear end away from the side walls. Install the shelf supports in the opposite sequence.

Safety instructions

Installation

⚠ **WARNING!** Only a qualified person must install this appliance.

- Remove all the packaging.
- Do not install or use a damaged appliance.
- Follow the installation instructions supplied with the appliance.
- Always take care when moving the appliance as it is heavy. Always use safety gloves and enclosed footwear.
- Do not pull the appliance by the handle.
- The kitchen cabinet and the recess must have suitable dimensions.
- Keep the minimum distance from other appliances and units.
- Install the appliance in a safe and suitable place that meets installation requirements.
- Parts of the appliance carry current. Close the appliance with furniture to prevent touching the dangerous parts.
- The appliance is equipped with an electric cooling system. It must be operated with the electric power supply.

Electrical connection

WARNING! Risk of fire and electric shock.

- All electrical connections should be made by a qualified electrician.
- The appliance must be earthed.
- Make sure that the parameters on the rating plate are compatible with the electrical ratings of the mains power supply.
- Always use a correctly installed shockproof socket.
- Do not use multi-plug adapters and extension cables.
- Make sure not to cause damage to the mains plug and to the mains cable. Should the mains cable need to be replaced, this must be carried out by our Authorised Service Centre.
- Do not let mains cables touch or come near the appliance door, especially when the door is hot.
- The shock protection of live and insulated parts must be fastened in such a way that it cannot be removed without tools.
- Connect the mains plug to the mains socket only at the end of the installation. Make sure that there is access to the mains plug after the installation.
- If the mains socket is loose, do not connect the mains plug.
- Do not pull the mains cable to disconnect the appliance. Always pull the mains plug.
- Use only correct isolation devices: line protecting cut-outs, fuses (screw type fuses removed from the holder), earth leakage trips and contactors.
- The electrical installation must have an isolation device which lets you disconnect the appliance from the mains at all poles. The isolation device must have a contact opening width of minimum 3 mm.
- This appliance complies with the E.E.C. Directives.

Use

WARNING! Risk of injury, burns and electric shock or explosion.

- This appliance is for household use only.
- Do not change the specification of this appliance.
- Make sure that the ventilation openings are not blocked.
- Do not let the appliance stay unattended during operation.
- Deactivate the appliance after each use.
- Be careful when you open the appliance door while the appliance is in operation. Hot air can release.
- Do not operate the appliance with wet hands or when it has contact with water.
- Do not apply pressure on the open door.
- Do not use the appliance as a work surface or as a storage surface.
- Open the appliance door carefully. The use of ingredients with alcohol can cause a mixture of alcohol and air.
- Do not let sparks or open flames to come in contact with the appliance when you open the door.
- Do not put flammable products or items that are wet with flammable products in, near or on the appliance.

WARNING! Risk of damage to the appliance.

- To prevent damage or discoloration to the enamel:
  - do not put ovenware or other objects in the appliance directly on the bottom.
  - do not put aluminium foil directly on the bottom of cavity of the appliance.
  - do not put water directly into the hot appliance.
  - do not keep moist dishes and food in the appliance after you finish the cooking.
  - be careful when you remove or install the accessories.
- Discoloration of the enamel or stainless steel has no effect on the performance of the appliance.
- Use a deep pan for moist cakes. Fruit juices cause stains that can be permanent.
- This appliance is for cooking purposes only. It must not be used for other purposes, for example room heating.
- Always cook with the oven door closed.

Care and cleaning

WARNING! Risk of injury, fire, or damage to the appliance.

- Before maintenance, deactivate the appliance and disconnect the mains plug from the mains socket.
- Make sure the appliance is cold. There is the risk that the glass panels can break.
- Replace immediately the door glass panels when they are damaged. Contact the Authorised Service Centre.
- Be careful when you remove the door from the appliance. The door is heavy!
- Clean regularly the appliance to prevent the deterioration of the surface material.
- Clean the appliance with a moist soft cloth. Only use neutral detergents. Do not use any abrasive products, abrasive cleaning pads, solvents or metal objects.
- If you use an oven spray, follow the safety instruction on it's packaging.
- Do not clean the catalytic enamel (if applicable) with any kind of detergent.

Internal lighting

WARNING! Risk of electric shock.

- The type of light bulb or halogen lamp used for this appliance is for household appliances only. Do not use it for house lighting.
- Before replacing the lamp, disconnect the appliance from the power supply.
- Only use lamps with the same specifications(G9 40W Halogen).

Service

- To repair the appliance contact an Authorised Service Centre.
- Use original spare parts only.

Disposal

WARNING! Risk of injury or suffocation.

- Disconnect the appliance from the mains supply.
- Cut off the mains electrical cable close to the appliance and dispose of it.
- Remove the door catch to prevent children or pets from becoming trapped in the appliance.

Product description

General overview

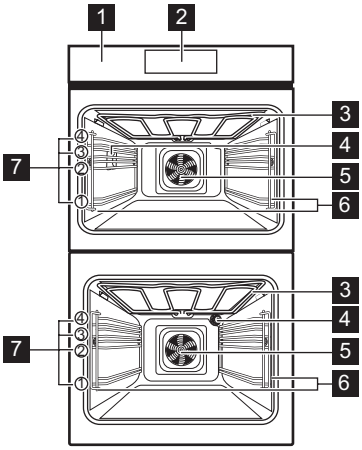

1 Control panel
2 Electronic programmer
3 Heating element
4 Lamp
5 Fan
6 Shelf support, removable
7 Shelf positions

Accessories

- **Wire shelf**
  For cookware, cake tins, roasts.
- **Grill- / Roasting pan**
  To bake and roast or as pan to collect fat.
- **Trivet**
  For roasting and grilling.

Use the trivet only with the Grill- / roasting pan.

- **Telescopic runners**
  For shelves and trays.

Control panel

Electronic programmer

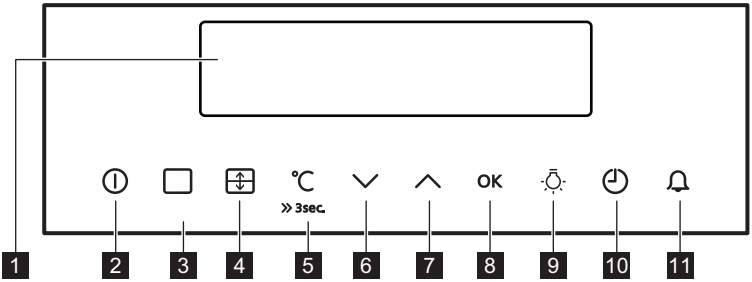

Use the sensor fields to operate the appliance.

	Sensor Field	Function	Description
1	-	DISPLAY	Shows the current settings of the appliance.
2		ON / OFF	To activate and deactivate the appliance.
3		OPTIONS	To set an oven function, a cleaning function or an automatic programme.
4		OVEN SELECTION	To switch between top and main oven.
5	°C » 3sec.	TEMPERATURE	To set and examine the cavity temperature or the core temperature sensor temperature (if present).
6		UP	To move up in the menu.
7		DOWN	To move down in the menu.
8	OK	OK	To confirm the selection or setting. To move down in the menu.
9		OVEN LIGHT	To activate or deactivate the oven lamp.
10		CLOCK	To set the clock functions.
11		MINUTE MINDER	To set the Minute Minder.

Display

Other indicators of the display:

Symbol	Name	Description
h / min	**h / min**	A clock function operates.
°C ➔➔	**Temperature / Fast heat up**	The function operates.
°C	**Temperature**	The current temperature is indicated.
	Light	You deactivated the light.
	Minute minder	The minute minder function operates.

Heat up indicator

If you turn on the heating function, appears. The bars show that the temperature in the oven increases or decreases.

When the oven is at the set temperature, the bars go off the display.

Before first use

WARNING! Refer to Safety chapters.

To set the Time of day refer to "Clock functions" chapter.

Initial Cleaning

Remove all accessories and removable shelf supports from the oven.

Refer to "Care and cleaning" chapter.

Clean the oven and the accessories before the first use.
Put the accessories and the removable shelf supports back to their initial position.

Preheating

Preheat the empty oven to burn off the remaining grease.

Preheat the two ovens. Heat up one oven at a time.

Set the functions listed below, if applicable.

1. Set the function and the temperature to 250ºC.
   Let the appliance operate for 1 hour.
2. Set the function and the temperature to 250ºC.
   Let the appliance operate for 15 minutes.
3. Set the function and the temperature to 250ºC.
   Let the appliance operate for 15 minutes.

Accessories can become hotter than usual. The appliance can emit an odour and smoke. This is normal. Make sure that the airflow is sufficient.

Daily use

WARNING! Refer to Safety chapters.

Selecting an oven

1. Press ⏻ to turn on the oven.
2. Press ⇕ again and again until the display shows the top / main oven indicator.

The top / main oven indicator shows which cavity is selected.

Top oven functions

Oven function		Application
	True Fan Cooking	To prepare tender, succulent roasts.
	Pizza Setting	To prepare tender, succulent roasts.
	Slow Cooking	To prepare tender, succulent roasts.
	Bottom Heat	To bake cakes with crispy bottom and to preserve food.
	Defrost	To defrost food (vegetables and fruit). The defrosting time depends on the amount and size of the frozen food.
	Grilling	To grill flat food and to toast bread.
	Turbo Grilling	To roast larger meat joints or poultry with bones on one shelf position. To make gratins and to brown.
	Catalysis	To help the self-cleaning catalytic oven layer.

Main oven functions

Oven function		Application
	True Fan Cooking	To prepare tender, succulent roasts.

Oven function		Application
	Pizza Setting	To bake and roast food on one shelf position.
	Slow Cooking	To prepare tender, succulent roasts.
	Conventional Cooking(Top / Bottom Heat)	To bake and roast food on one shelf position.
	Frozen Foods	To make convenience food (e.g. french fries, potato wedges or spring rolls) crispy.
	Grilling	To grill flat food and to toast bread.
	Turbo Grilling	To roast larger meat joints or poultry with bones on one shelf position. To make gratins and to brown.
	Bottom Heat	To bake cakes with crispy bottom and to preserve food.
	Defrost	To defrost food (vegetables and fruit). The defrosting time depends on the amount and size of the frozen food.
	Moist Fan Baking	This function is designed to save energy during cooking. For the cooking instructions refer to "Hints and tips" chapter, Moist Fan Baking. The oven door should be closed during cooking so that the function is not interrupted and to ensure that the oven operates with the highest energy efficiency possible. When you use this function, the temperature in the cavity may differ from the set temperature. The residual heat is used.The heating power may be reduced. For general energy saving recommendations refer to "Energy Efficiency" chapter, Energy Saving.This function was used to comply with the energy efficiency class according to EN 60350-1. When you use this function the lamp automatically turns off.
	Bread Baking	To bake bread.
	Keep Warm	To keep food warm.
	Catalysis	To help the self-cleaning catalytic oven layer.

Setting the heating function

1. Turn on the oven with ⏻.

The display shows the set temperature, the symbol and the number of the heating function.

2. Press ︿ or ﹀ to set a heating function.
3. Press OK or the oven starts automatically after 5 seconds.

If you turn on the oven and do not set any heating function or programme, the oven turns off automatically after 20 seconds.

Changing the temperature

Press ︿ or ﹀ to change the temperature in steps: 5 °C.
When the oven is at the set temperature a signal sounds and the Heat up indicator disappears.

Checking the temperature

You can check the current temperature in the oven when the function or programme works.

1. Press °C »3sec..

The display shows the temperature in the oven.

2. Press OK or the display shows again the set temperature automatically after 5 seconds.

Fast Heat Up

Do not put food in the oven when the Fast heat up works.

The Fast Heat Up is available only for some heating functions. If Faulty Tone is turned on in the settings menu, the signal sounds if the Fast Heat Up is not available for the set function. Refer to "Additional functions" chapter, Using the settings menu.

The Fast Heat Up decreases the heat up time.

To turn on the Fast Heat Up press and hold °C »3sec. for more than 3 seconds.
If the Fast Heat Up is turned on the display shows flashing bars.

Clock functions

Clock functions table

Clock function		Application
🕘	TIME OF DAY	To show or change the time of day. You can change the time of day only when the oven is on.
⊢→⊣	DURATION	To set how long the oven works.
→⊣	END	To set when the oven turns off.
⊢→⊣ →⊣	TIME DELAY	To combine DURATION and END function.

Clock function		Application
⏸	SET+GO	To turn on the oven with necessary settings with only one press of the sensor field any time later.
🔔	MINUTE MINDER	To set a countdown time. This function has no effect on the operation of the oven. You can set the MINUTE MINDER at any time and also when the oven is off.
00:00	COUNT UP TIMER	To set the count up, which shows how long the oven works. This function has no effect on the operation of the oven. It is on immediately when the oven starts to heat. The COUNT UP TIMER is not turned on if DURATION and END are set.

Setting and changing the time

After the first connection to the mains, wait until the display shows h and **12:00**. "**12**" flashes.

1. Press ⌃ or ⌄ to set the hours.
2. Press OK.
3. Press ⌃ or ⌄ to set the minutes.
4. Press OK.

The display shows the new time.

To change the time of day press ◷ again and again until ◷ starts to flash.

Setting the DURATION

1. Set a heating function and temperature.
2. Press ◷ again and again until ⊢→| starts to flash.
3. Press ⌃ or ⌄ to set the minutes for DURATION.
4. Press OK or the DURATION starts automatically after 5 seconds.
5. Press ⌃ or ⌄ to set the hours for DURATION.
6. Press OK or the DURATION starts automatically after 5 seconds.

When the set time ends, the signal sounds for 2 minutes. The display shows flashing ⊢→| and time setting. The oven turns off.

7. Press a sensor field to stop the signal.
8. Turn off the oven.

Setting the END

1. Set a heating function and temperature.
2. Press ◷ again and again until →| starts to flash.
3. Press ⌃ or ⌄ to set the END and press OK. First you set the minutes and then the hours.

When the set time ends, the signal sounds for 2 minutes. The display shows flashing →| and the time setting . The oven turns off automatically.

4. Press a sensor field to stop the signal.
5. Turn off the oven.

Setting the TIME DELAY function

1. Set a heating function and temperature.
2. Press ⏲ again and again until ↦| starts to flash.
3. Press ︿ or ﹀ to set the minutes for DURATION.
4. Press OK.
5. Press ︿ or ﹀ to set the hours for DURATION.
6. Press OK.

The display shows flashing →|.

7. Press ︿ or ﹀ to set the END time and press OK. First you set the minutes and then the hours.

The oven turns on automatically later on, works for the set DURATION time and stops at the set END time. When the set time ends, the signal sounds for 2 minutes. The display shows flashing →| and the time setting . The oven turns off automatically.

8. Press a sensor field to stop the signal.
9. Turn off the oven.

ⓘ When the Time delay function is turned on, the display shows a symbol of the heating function, ↦| with a dot and →|. The dot shows which clock function is on in the Clock / residual heat display.

Setting the SET+GO

You can use the SET+GO function only when the DURATION is set.

1. Set a heating function and temperature.
2. Set the DURATION.
3. Press ⏲ again and again until the display shows flashing ⏸.
4. Press OK to set the SET+GO function.

The display shows ↦| and ⏸ with an indicator. This indicator shows which clock function is activated.

5. Press a sensor field (apart from ON / OFF) to start the SET+GO function.

Setting: Minute Minder

1. Press 🔔.

The display shows flashing 🔔 and "00".

2. Press 🔔 to switch between options. First you set the seconds, then the minutes and the hours.
3. Press ︿ or ﹀ to set the MINUTE MINDER and 🔔 to confirm.
4. Press OK or the MINUTE MINDER starts automatically after 5 seconds.

When the set time ends, the signal sounds for 2 minutes and the display shows flashing 00:00 and 🔔.

5. Press a sensor field to stop the signal.

COUNT UP TIMER

1. To reset the Count Up Timer press:﹀ and ︿ at the same time .
2. When the display shows "00:00" the Count Up Timer starts to count up again.

Using the accessories

WARNING! Refer to Safety chapters.

Inserting the accessories

Wire shelf:

Push the shelf between the guide bars of the shelf support .

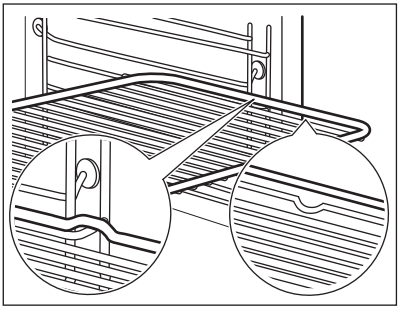

Deep pan:

Push the deep pan between the guide bars of the shelf support.

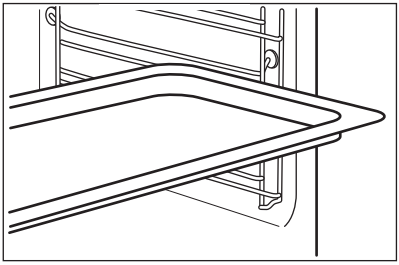

Wire shelf and deep pan together:

Push the deep pan between the guide bars of the shelf support and the wire shelf on the guide bars above.

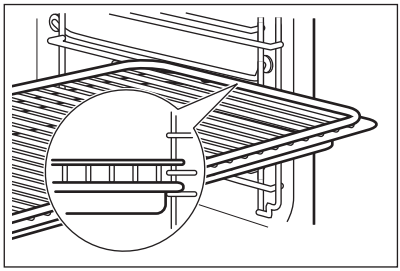

Small indentation at the top increase safety. The indentations are also anti-tip devices. The high rim around the shelf prevents cookware from slipping of the shelf.

Telescopic runners - inserting the accessories

With the telescopic runners you can put in and remove the shelves more easily.

CAUTION! Do not clean the telescopic runners in the dishwasher. Do not lubricate the telescopic runners.

CAUTION! Make sure you push back the telescopic runners fully in the oven before you close the oven door.

Wire shelf:

Put the wire shelf on the telescopic runners so that the feet point downwards.

The high rim around the wire shelf is a special device to prevent the cookware from slipping.

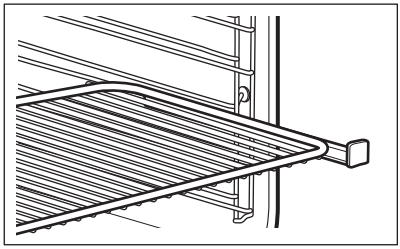

Deep pan:

Put the deep pan on the telescopic runners.

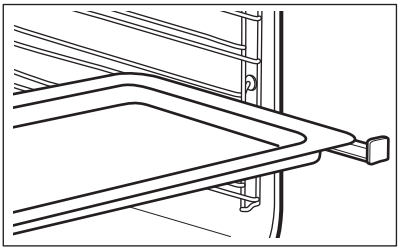

Wire shelf and deep pan together:

Place the wire shelf and the deep pan together on the telescopic runner.

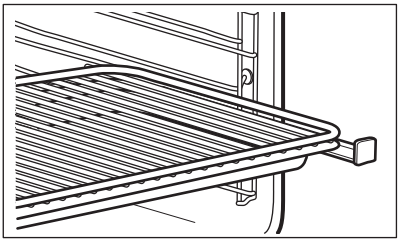

Trivet and Grill- / Roasting pan

WARNING! Be careful when you remove the accessories from a hot oven. There is a risk of burns.

You can use the trivet to roast larger pieces of meat or poultry on one shelf position.

1. Put the trivet into the deep pan so that the supports of the wire shelf point up.

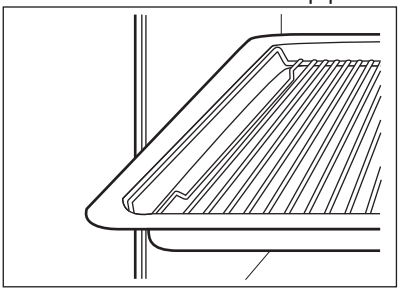

2. Put the deep pan into the oven on the necessary shelf position.

You can use the trivet to grill flat dishes in large quantities and to toast.

1. Put the trivet into the deep pan so that the supports of the wire shelf point down.

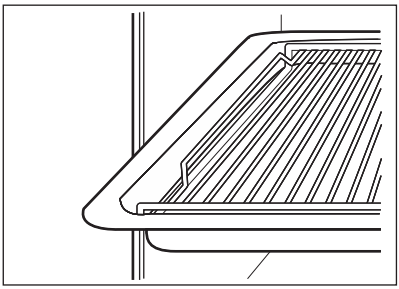

2. Put the deep pan into the oven on the necessary shelf position.

Additional functions

Using the Child Lock

The Child Lock prevents an accidental operation of the oven.

1. You can turn on this function when the oven is off. Do not set a heating function.
2. Press and hold ⏻ for 3 seconds.
3. Press and hold ⏲ and ∨ at the same time for 2 seconds.

The display shows SAFE.
To turn off the Child Lock function repeat step 3.

Using the Function Lock

You can turn on the function only when the oven works.

The Function Lock prevents an accidental change of the oven function.

1. To turn on the function turn on the oven.
2. Turn on an oven function or setting.
3. Touch and hold ⏲ and ∨ at the same time for 2 seconds.

A signal sounds.
Lock comes on in the display.
To turn off the Function Lock repeat step 3.

ⓘ You can turn off the oven when the Function Lock is on. When you turn off the oven, the Function Lock turns off.

Using the settings menu

The settings menu lets you turn on or turn off functions in the main menu. The display shows SET and the number of the setting.

	Description	Value to set
1	SET+GO	ON / OFF
2	RESIDUAL HEAT INDICATOR	ON / OFF

	Description	Value to set
3	KEY TONE[1)]	CLICK / BEEP / OFF
4	FAULTY TONE	ON / OFF
5	DEMO MODE	Activation code: 2468
6	BRIGHTNESS	LOW / MEDIUM / HIGH
7	SERVICE MENU	-
8	RESTORE SETTINGS	YES / NO

1) It is not possible to deactivate the tone of the ON / OFF sensor field.

1. Press and hold ☐ for 3 seconds.
The display shows SET1 and "1" flashes.
2. Press ⌃ or ⌄ to set the setting.
3. Press OK.
4. Press ⌃ or ⌄ to change the value of the setting.
5. Press OK.

To exit the Settings menu, press ⏻ or press and hold ☐.

Automatic Switch-off

For safety reasons the appliance deactivates automatically after some time if an oven function operates and you do not change any settings.

Temperature (°C)	Switch-off time (h)
30 - 115	12.5
120 - 195	8.5
200 - 245	5.5
250 - maximum	1.5

After the Automatic switch-off, touch a sensor field to operate the appliance again.

ⓘ The Automatic switch-off does not work with the functions: Light, Slow Cooking, Duration, End, Time delay.

Brightness of the display

There are two modes of display brightness:

- Night brightness - when the appliance is deactivated, the brightness of the display is lower between 10 PM and 6 AM.
- Day brightness:
  - when the appliance is activated.
  - if you touch a sensor field during the night brightness (apart from ON / OFF), the display goes back to the day brightness mode for the next 10 seconds.
  - if the appliance is deactivated and you set the Minute Minder. When the Minute Minder function ends, the display goes back to the night brightness.

Cooling fan

When the oven operates, the cooling fan turns on automatically to keep the surfaces of the oven cool. If you turn off the oven, the cooling fan can continues to operate until the oven cools down.

Do not unplug the oven immediately after cooking.

Hints and tips

WARNING! Refer to Safety chapters.

The temperature and baking times in the tables are guidelines only. They depend on the recipes and the quality and quantity of the ingredients used.

Double oven

Top oven

The top oven is the smaller of the two ovens. It has 4 shelf positions. Use it to cook smaller quantities of food. It gives especially good results when used to cook fruitcakes, sweets and savoury flans or quiche.

Main oven

The main oven is the bigger of the two ovens. It is particularly suitable for cooking larger quantities of food.

Baking

- Use the lower temperature the first time.
- You can extend baking times by 10 – 15 minutes if you bake cakes on more than one shelf position.
- Cakes and pastries at different heights do not always brown equally. There is no need to change the temperature setting if an unequal browning occurs. The differences equalize during baking.
- Trays in the oven can twist during baking. When the trays become cold again, the distortions disappear.

Tips on baking

Baking results	Possible cause	Remedy
The bottom of the cake is not browned sufficiently.	The shelf position is incorrect.	Put the cake on a lower shelf.

Baking results	Possible cause	Remedy
The cake sinks and becomes soggy, lumpy or streaky.	The oven temperature is too high.	The next time you bake, set a slightly lower oven temperature.
	The baking time is too short.	Set a longer baking time. You cannot decrease baking times by setting higher temperatures.
	There is too much liquid in the mixture.	Use less liquid. Be careful with mixing times, especially if you use a mixing machine.
The cake is too dry.	The oven temperature is too low.	The next time you bake, set a higher oven temperature.
	The baking time is too long.	The next time you bake, set a shorter baking time.
The cake browns unevenly.	The oven temperature is too high and the baking time is too short.	Set a lower oven temperature and a longer baking time.
	The mixture is unevenly distributed.	Spread the mixture evenly on the baking tray.
The cake is not ready in the baking time given.	The oven temperature is too low.	The next time you bake, set a slightly higher oven temperature.

Baking

Top oven

Food	Temperature (°C)	Time (min)	Shelf position
Biscuits	170 - 190	10 - 20	2
Bread	200 - 220	30 - 35	1
Bread rolls / buns	170-180	10 - 15	1
Cakes:			
- Small & Queen	160 - 170	18 - 25	2
- Sponges	160 - 175	20 - 30	2
- Victoria Sandwich	160 - 170	18 - 25	2
- Madeira	140 - 150	75 - 90	2
- Rich Fruit	140 - 150	120 - 150	2
- Gingerbread	140 - 150	75 - 90	2
- Meringues	90 - 100	150 - 180	2
- Flapjack	160 - 170	25 - 30	2

Food	Temperature (°C)	Time (min)	Shelf position
- Shortbread	130 - 150	45 - 65	2
Casseroles:			
- Beef / Lamb	160 - 170	150 - 180	1
- Chicken	160 - 180	75 - 90	1
Fish	170 - 190	20 - 30	2
Fish Pie (Potato Topped)	190 - 200	20 - 30	2
Fruit Pies, Crumbles	190 - 200	30 - 50	2
Milk Puddings	150 - 170	90 - 120	2
Pasta, Lasagne etc.	170 - 180	40 - 50	2
Pastry:			
- Choux	180 - 190	30 - 40	2
- Eclairs, Profiteroles	180 - 190	30 - 40	2
- Flaky / Puff Pies	210 - 220	30 - 40	2
Shortcrust:			
- Mince Pies	190 - 210	15 - 20	2
- Meat Pies	190 - 210	25 - 35	2
- Quiche, Tarts, Flans	180 - 200	25 - 50	2
Scones	220 - 230	8 - 12	2
Shepard's Pie	180 - 190	30 - 40	2
Souffles	190 - 200	20 - 30	2
Vegetables:			
- Baked Jacket Potatoes	180 - 190	60 - 90	2
- Roast Potatoes	180 - 190	60 - 90	2
Yorkshire Pudding:			
- Large	200 - 210	25 - 40	1
- Individual	210 - 220	15 - 25	1

Moist Fan Baking

For the best results follow suggestions listed in the table below.

Food	Accessories	Temperature (°C)	Shelf position	Time (min)
Sweet rolls, 16 pieces	baking tray or dripping pan	180	2	30 - 40
Pizza, frozen, 0.35 kg	wire shelf	220	1	35 - 45
Swiss roll	baking tray or dripping pan	180	1	30 - 40
Brownie	baking tray or dripping pan	180	1	35 - 45
Soufflè, 6 pieces	ceramic ramekins on wire shelf	200	2	40 - 50
Sponge flan base	flan base tin on wire shelf	180	1	30 - 40
Victoria Sandwich	baking dish on wire shelf	170	1	40 - 50
Poached fish, 0.3 kg	baking tray or dripping pan	180	2	25 - 35
Whole fish, 0.2 kg	baking tray or dripping pan	180	2	20 - 30
Fish fillet, 0.3 kg	pizza pan on wire shelf	180	2	25 - 35
Poached meat, 0.25 kg	baking tray or dripping pan	200	2	30 - 40
Cookies, 16 pieces	baking tray or dripping pan	170	1	25 - 35
Macaroons, 24 pieces	baking tray or dripping pan	160	1	35 - 45
Muffins, 12 pieces	baking tray or dripping pan	170	1	30 - 40
Savory pastry, 20 pieces	baking tray or dripping pan	170	2	30 - 40
Short crust biscuits, 20 pieces	baking tray or dripping pan	150	1	30 - 40
Tartlets, 8 pieces	baking tray or dripping pan	180	1	30 - 40
Poached vegetables, 0.4 kg	baking tray or dripping pan	180	2	30 - 40

Food	Accessories	Temperature (°C)	Shelf position	Time (min)
Vegetarian omelette	pizza pan on wire shelf	200	2	30 - 40
Vegetables, mediterrean 0.7 kg	baking tray or dripping pan	180	3	30 - 40

Slow Cooking

Use this function to prepare lean, tender pieces of meat and fish. This function is not applicable to such recipes as pot roast or fatty roast pork.

In the first 10 minutes you can set an oven temperature between 80 °C and 150 °C. The default is 90 °C. After the temperature is set, the oven continues to cook at 80 °C. Do not use this function for poultry.

ⓘ Always cook without a lid when you use this function.

1. Sear the meat in a pan on the hob on a very high setting for 1 - 2 minutes on each side.
2. Put the meat together with the hot roasting pan into the oven on the wire shelf.
3. Select the function Slow Cooking.

Food	Quantity	Temperature (°C)	Time (min)	Shelf position
Roast beef	1000 - 1500 g	150	120 - 150	1
Fillet of beef	1000 - 1500 g	150	90 - 110	1
Roast veal	1000 - 1500 g	150	120 - 150	1
Steak	200 - 300 g	120	20 - 40	1

Pizza Setting

Top oven

Food	Temperature (°C)	Time (min)	Shelf position
Apple Pie	160 - 180	160 - 180	1
Plate Tart	160 - 180	25 - 50	1
Quiches / Tarts	160 - 180	25 - 50	1

Roasting

Use heat-resistant ovenware.

Roast large roasting joints directly in the tray or on the wire shelf placed above the tray.

Put some water in the tray to prevent the meat juices or fat from burning.

Meat with crackling can be roasted in the roasting tin without the lid.

Turn the roast after 1/2 - 2/3 of the cooking time.

To keep meat more succulent:
- roast lean meat in the roasting tin with the lid or use roasting bag.
- roast meat and fish in large pieces (1 kg or more).
- baste large roasts and poultry with their juices several times during roasting.

Roasting tables - Main oven

Beef

Food	Quantity	Temperature (°C)	Time (min)	Shelf position
Roast beef or fillet: rare	per cm of thickness	190 - 200[1)]	5 - 6	2
Roast beef or fillet: medium	per cm of thickness	180 - 190[1)]	6 - 8	2
Roast beef or fillet: well done	per cm of thickness	170 - 180[1)]	8 - 10	2

[1)] Preheat the oven.

Pork

Food	Quantity (kg)	Temperature (°C)	Time (min)	Shelf position
Shoulder, neck, ham	1 - 1.5	160 - 180	90 - 120	2
Pork chop	1 - 1.5	160 - 180	60 - 90	2
Meat loaf	0.75 - 1	160 - 170	45 - 60	2
Knuckle of pork (precooked)	0.75 - 1	150 - 170	90 - 120	2

Veal

Food	Quantity (kg)	Temperature (°C)	Time (min)	Shelf position
Roast veal	1	160 - 180	90 - 120	2
Knuckle of veal	1.5 - 2	160 - 180	120 - 150	2

Lamb

Food	Quantity (kg)	Temperature (°C)	Time (min)	Shelf position
Leg of lamb, roast lamb	1 - 1.5	150 - 170	75 - 120	2
Saddle of lamb	1 - 1.5	160 - 180	60 - 90	2

Game

Food	Quantity (kg)	Temperature (°C)	Time (min)	Shelf position
Saddle of hare, leg of hare	Up to 1 kg	220 - 250	25 - 40	2
Loin of Game	1.5 - 2	210 - 220	75 - 105	1
Leg of Game	1.5 - 2	200 - 210	90 - 135	1

Poultry

Food	Quantity (kg)	Temperature (°C)	Time (min)	Shelf position
Poultry pieces	0.2 - 0.25 each	200 - 220	35 - 50	3
Half chicken	0.4 - 0.5 each	190 - 210	35 - 50	3
Poultry	1 - 1.5	190 - 210	45 - 75	1
Duck	1.5 - 2	180 - 200	75 - 100	1
Goose	3.5 - 5	160 - 180	150 - 210	1
Turkey	2.5 - 3.5	160 - 180	105 - 150	1
Turkey	4 - 6	140 - 160	150 - 240	1

Fish (steamed)

Type of meat	Quantity (kg)	Temperature (°C)	Time (min)	Shelf position
Whole fish	1 - 1.5	210 - 220	40 - 60	1

Grilling

Always grill with the maximum temperature setting.

Set the shelf into the shelf position as recommended in the grilling table.

For grilling in the top oven adjust the shelf position to suit different thicknesses of food.

Always set the pan to collect the fat into the first shelf position.

Grill only flat pieces of meat or fish.

Always preheat the empty oven with the grill functions for 5 minutes.

⚠ **CAUTION!** Always grill with the oven door closed.

Grilling and Fast Grilling - Top oven

Food	Time (min)
Bacon Rashers	5 -6
Beefburgers	10 - 20

Food	Time (min)
Chicken Joints	20 - 40
Lamb Chops	15 - 25
Pork Chops	20 - 25
Whole Fish, Trout / Makarel	10 - 12
Fillets, Plaice / Cod	4 - 6
Kebabs	12 - 18
Kidneys, Lamb / Pig	6 - 10
Sausages	20 - 30
Toasted Sandwiches	3 - 4
Steaks:	
- Rare	4 - 6
- Medium	6 - 8
- Well Done	12 - 15

Grilling - Main oven

Food	Temperature (°C)	Time (min)		Shelf position
		1st side	2nd side	
Roast beef	210 - 230	30 - 40	30 - 40	2
Filet of beef	230	20 - 30	20 - 30	3
Back of pork	210 - 230	30 - 40	30 - 40	2
Back of veal	210 - 230	30 - 40	30 - 40	2
Back of lamb	210 - 230	25 - 35	20 - 25	3
Whole Fish, 500 - 1000 g	210 - 230	15 - 30	15 - 30	3 / 4

Defrost - Main oven

Remove the food packaging and put the food on a plate.

Use the first shelf position from the bottom.

Do not cover the food with a bowl or a plate, as this can extend the defrost time.

Food	Quantity (kg)	Defrosting time (min)	Further defrosting time (min)	Comments
Chicken	1	100 - 140	20 - 30	Put the chicken on an upturned saucer in a big plate. Turn halfway through.
Meat	1	100 - 140	20 - 30	Turn halfway through.
Meat	0.5	90 - 120	20 - 30	Turn halfway through.
Trout	0.15	25 - 35	10 - 15	-
Strawberries	0.3	30 - 40	10 - 20	-
Butter	0.25	30 - 40	10 - 15	-
Cream	2 x 0.2	80 - 100	10 - 15	Whip the cream when still slightly frozen in places.
Gateau	1.4	60	60	-

Care and cleaning

WARNING! Refer to Safety chapters.

Notes on cleaning

Clean the front of the oven with a soft cloth with warm water and a mild cleaning agent.

To clean metal surfaces, use a dedicated cleaning agent.

Clean the oven interior after each use. Fat accumulation or other food remains may result in a fire. The risk is higher for the grill pan.

Clean all accessories after each use and let them dry. Use a soft cloth with warm water and a cleaning agent. Do not clean the accessories in the dishwasher.

Clean stubborn dirt with a special oven cleaner. Do not apply oven cleaner on the catalytic surfaces.

If you have nonstick accessories, do not clean them using aggressive agents, sharp-edged objects or a dishwasher. It can cause damage to the nonstick coating.

Clean the moisture from the cavity after each use.

Stainless steel or aluminium ovens

Clean the oven door with a damp cloth or sponge only. Dry it with a soft cloth.

Do not use steel wool, acids or abrasive materials as they can damage the oven surface. Clean the oven control panel with the same precautions.

Removing the shelf supports

To clean the oven, remove the shelf supports.

CAUTION! Be careful when you remove the shelf supports.

1. Pull the front of the shelf support away from the side wall.

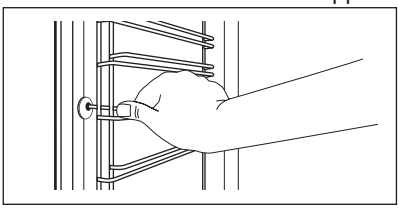

2. Pull the rear end of the shelf support away from the side wall and remove it.

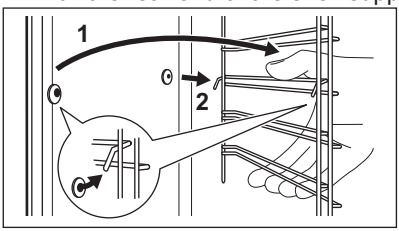

Install the removed accessories in the opposite sequence.

The retaining pins on the telescopic runners must point to the front.

Catalytic cleaning

The cavity is coated with a catalytic enamel. It absorbs fat.

Before you turn on the Catalytic cleaning:

- remove all the accessories and removable shelf supports.
- clean the oven floor with warm water and mild detergent.
- clean the inner door glass with warm water and soft cloth.

1. Press ☐ again and again until the display shows "Cata" and the duration of the cleaning (1 hour).

You cannot change the duration of the Catalytic cleaning. You can delay the start of the cleaning with the function: END.

The signal sounds at the end of cleaning. The oven turns off.

2. Press any sensor field to stop the signal.

3. When the oven cools down, clean the cavity with a wet soft cloth.

Spots or discolouration of the catalytic coating have no effect on Catalytic cleaning.

Removing and installing the door

You can remove the door and the internal glass panels to clean it. The number of glass panels is different for different models.

WARNING! The door is heavy.

1. Open the door fully.
2. Fully lift up the clamping levers (A) on the two door hinges.

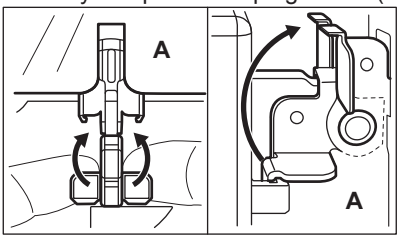

3. Close the door until it is at an angle of approximately 45°.

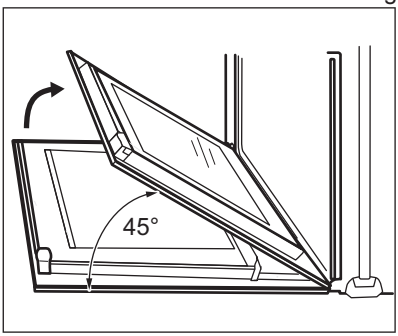

4. Hold the door trim (B) on the top edge of the door at the two sides and push inwards to release the clip seal.

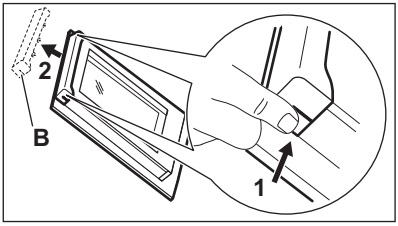

CAUTION! Rough handling of the glass, especially around the edges of the front panel, can cause the glass to break.

5. Pull the door trim to the front to remove it.
6. Hold the door glass panels on their top edge one by one and pull them up out of the guide.

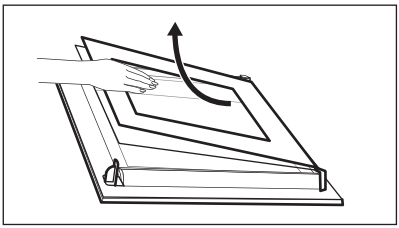

7. Clean the glass panel with water and soap. Dry the glass panel carefully.
When the cleaning is completed, do the above steps in the opposite sequence. Install the smaller panel first, then the larger and the door.

WARNING! Make sure that the glasses are inserted in the correct position otherwise the surface of the door may overheat.

Replacing the lamp

WARNING! Risk of electric shock.
The lamp can be hot.

1. Turn off the oven.
Wait until the oven is cooled down.
2. Disconnect the oven from the mains.
3. Put a cloth on the bottom of the cavity.

The back lamp

The lamp glass cover is at the back of the cavity.

1. Turn the lamp glass cover counterclockwise to remove it.
2. Clean the glass cover.
3. Replace the oven lamp with a suitable 300 °C heat-resistant oven lamp.
Use the same oven lamp type.
4. Install the glass cover.

The side lamp

1. Remove the left shelf support to get access to the lamp.
2. Use a narrow, blunt object (e.g. a teaspoon) to remove the glass cover.

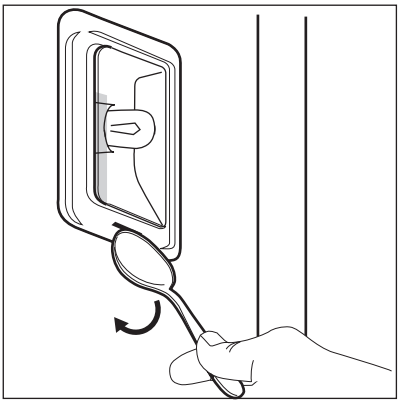

3. Clean the glass cover.
4. Replace the lamp with a suitable 300 °C heat-resistant lamp.
5. Install the glass cover.
6. Install the left shelf support.

Troubleshooting

⚠ **WARNING!** Refer to Safety chapters.

What to do if...

Problem	Possible cause	Remedy
The cooking zones do not operate.	Refer to the operating instructions for the built-in cooking surface.	
The oven does not heat up.	The oven is deactivated.	Activate the oven.
The oven does not heat up.	The clock is not set.	Set the clock.
The oven does not heat up.	The necessary settings are not set.	Make sure that the settings are correct.
The oven does not heat up.	The automatic switch-off is activated.	Refer to "Automatic switch-off".
The oven does not heat up.	The Child Lock is on.	Refer to "Using the Child Lock".
The oven does not heat up.	The fuse is blown.	Make sure that the fuse is the cause of the malfunction. If the fuse is blown again and again, contact a qualified electrician.
The lamp does not operate.	The lamp is defective.	Replace the lamp.

Problem	Possible cause	Remedy
It takes too long to cook the dishes or they cook too quickly.	The temperature is too low or too high.	Adjust the temperature if necessary. Follow the advice in the user manual.
Steam and condensation settle on the food and in the cavity of the oven.	You left the dish in the oven for too long.	Do not leave the dishes in the oven for longer than 15 - 20 minutes after the cooking process ends.
The display shows "C3".	The cleaning function does not operate. You did not fully close the door, or the door lock is defective.	Fully close the door.
The display shows an error code that is not in this table.	There is an electrical fault.	• Deactivate the oven with the house fuse or the safety switch in the fuse box and activate it again. • If the display shows the error code again, contact the Customer Care Department.
The appliance is activated and does not heat up. The fan does not operate. The display shows **"Demo"**.	The demo mode is activated.	Refer to "Using the settings menu" in "Additional functions" chapter.

Service data

If you cannot find a solution to the problem yourself, contact your dealer or an Authorised Service Centre.

The necessary data for the service centre is on the rating plate. The rating plate is on the front frame of the oven cavity. Do not remove the rating plate from the oven cavity.

We recommend that you write the data here:	
Model (MOD.)	.....
Product number (PNC)	.....
Serial number (S.N.)	.....

Energy efficiency

Product Fiche and information according to EU 65-66/2014

Supplier's name	Lamona

Model identification	LAM4406
Energy Efficiency Index	Top oven: 105.6 Main oven: 95.9
Energy efficiency class	Top oven: A Main oven: A
Energy consumption with a standard load, conventional mode	Top oven: not applicable Main oven: 0.85 kWh/cycle
Energy consumption with a standard load, fan-forced mode	Top oven: 0.75 kWh/cycle Main oven: 0.71 kWh/cycle
Number of cavities	2
Heat source	Electricity
Volume	Top oven: 39 l Main oven: 45 l
Type of oven	Built-Under Oven
Mass	51.3 kg

EN 60350-1 - Household electric cooking appliances - Part 1: Ranges, ovens, steam ovens and grills - Methods for measuring performance.

Energy saving

The oven contains features which help you save energy during everyday cooking.

General hints

Make sure that the oven door is closed properly when the oven operates. Do not open the door too often during cooking. Keep the door gasket clean and make sure it is well fixed in its position.

Use metal dishes to improve energy saving.

When possible, do not preheat the oven before you put the food inside.

When the cooking duration is longer than 30 minutes, reduce the oven temperature to minimum 3 - 10 minutes before the end of the cooking time, depending on the duration of the cooking. The residual heat inside the oven will continue to cook.

Use the residual heat to warm up other dishes.

Keep breaks between baking as short as possible when you prepare few dishes at one time.

Cooking with fan

When possible, use the cooking functions with fan to save energy.

Residual heat

If a programme with the Duration or End Time selection is activated and the cooking time is longer than 30 minutes, the heating elements automatically deactivate earlier in some oven functions.

The fan and lamp continue to operate.

Keep food warm

Choose the lowest possible temperature setting to use residual heat and keep a meal warm. The residual heat indicator or temperature appears on the display.

Cooking with the lamp off

Turn off the lamp during cooking. Turn it on only when you need it.

Moist Fan Baking

Function designed to save energy during cooking.

When you use this function the lamp is off.

Your guarantee

Product Guarantee Details (UK only)

Your appliance has the benefit of a comprehensive manufacturer's guarantee which covers the cost of breakdown repairs. (Details of which are shown on your Proof of Purchase Document).

- Any claim during the period of the guarantee (MUST BE ACCOMPANIED BY THE PROOF OF PURCHASE)
- The product must be correctly installed and operated in accordance with the manufacturer's instructions and used for normal domestic purposes.
- This guarantee does not cover accidental damage, misuse or alternations which are likely to affect the product.
- The guarantee is invalid if the product is tampered with, or repaired by any unauthorised person.

(The guarantee in no way affects your statutory or legal rights)

What to do if you need to report a problem-

Please ensure you have ready:

- **The product's model & serial numbers**
- **Howdens Proof of Purchase document**
- **Your full contact details**

Call the Service Line on 0344 460 0006

Environmental concerns

Recycle materials with the symbol ♲. Put the packaging in relevant containers to recycle it. Help protect the environment and human health by recycling waste of electrical and electronic appliances. Do not dispose of appliances marked with the symbol with the household waste. Return the product to your local recycling facility or contact your municipal office.

867344500-E-492018

Product serial number
(Place sticker here)

LAMONA

Exclusive to Howdens Joinery Co.