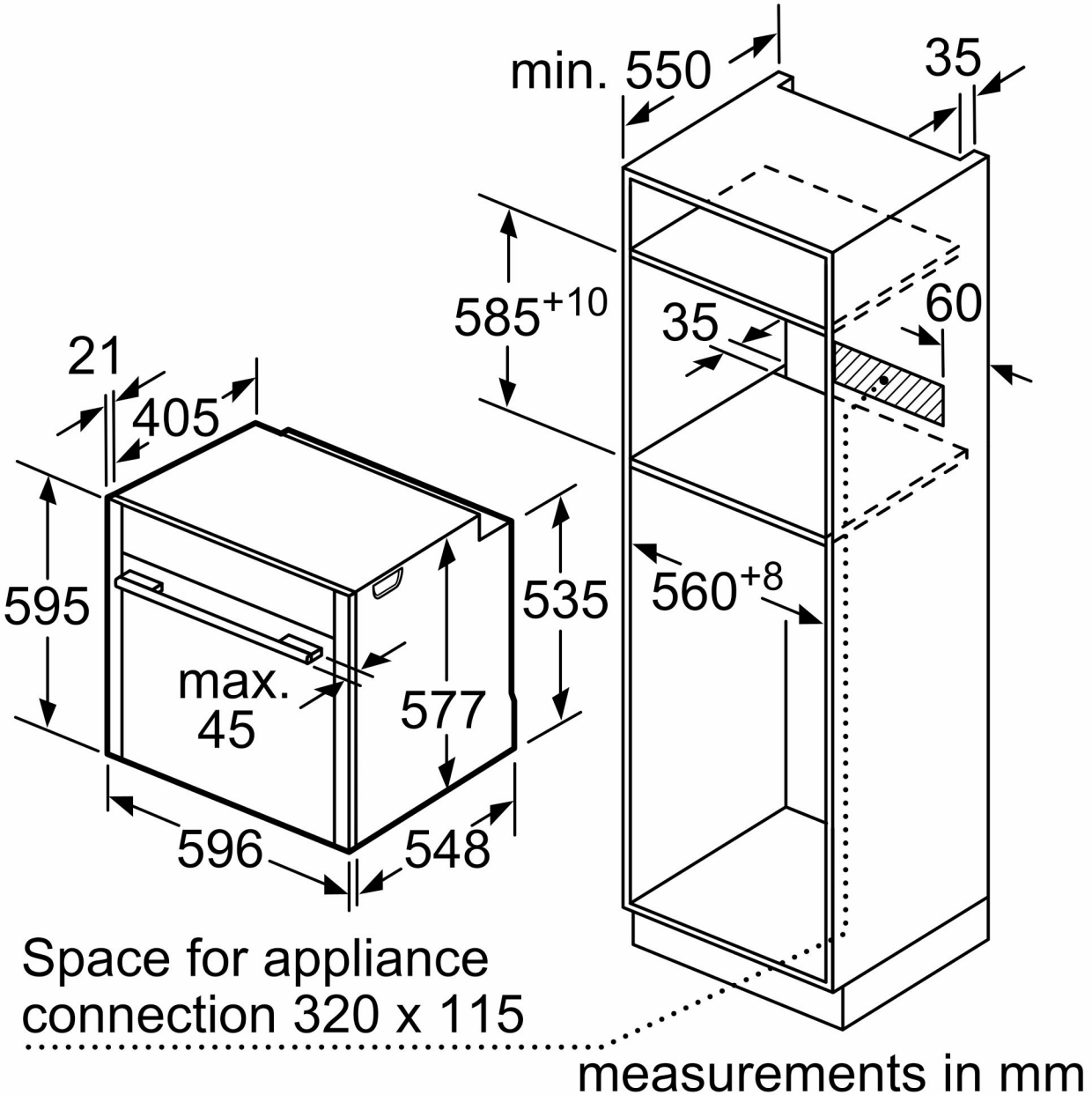
min. 550
35
585+10
35
60
21
405
595
535
560+8
max.
45
577
596
548
Space for appliance
connection 320 x 115
measurements in mm