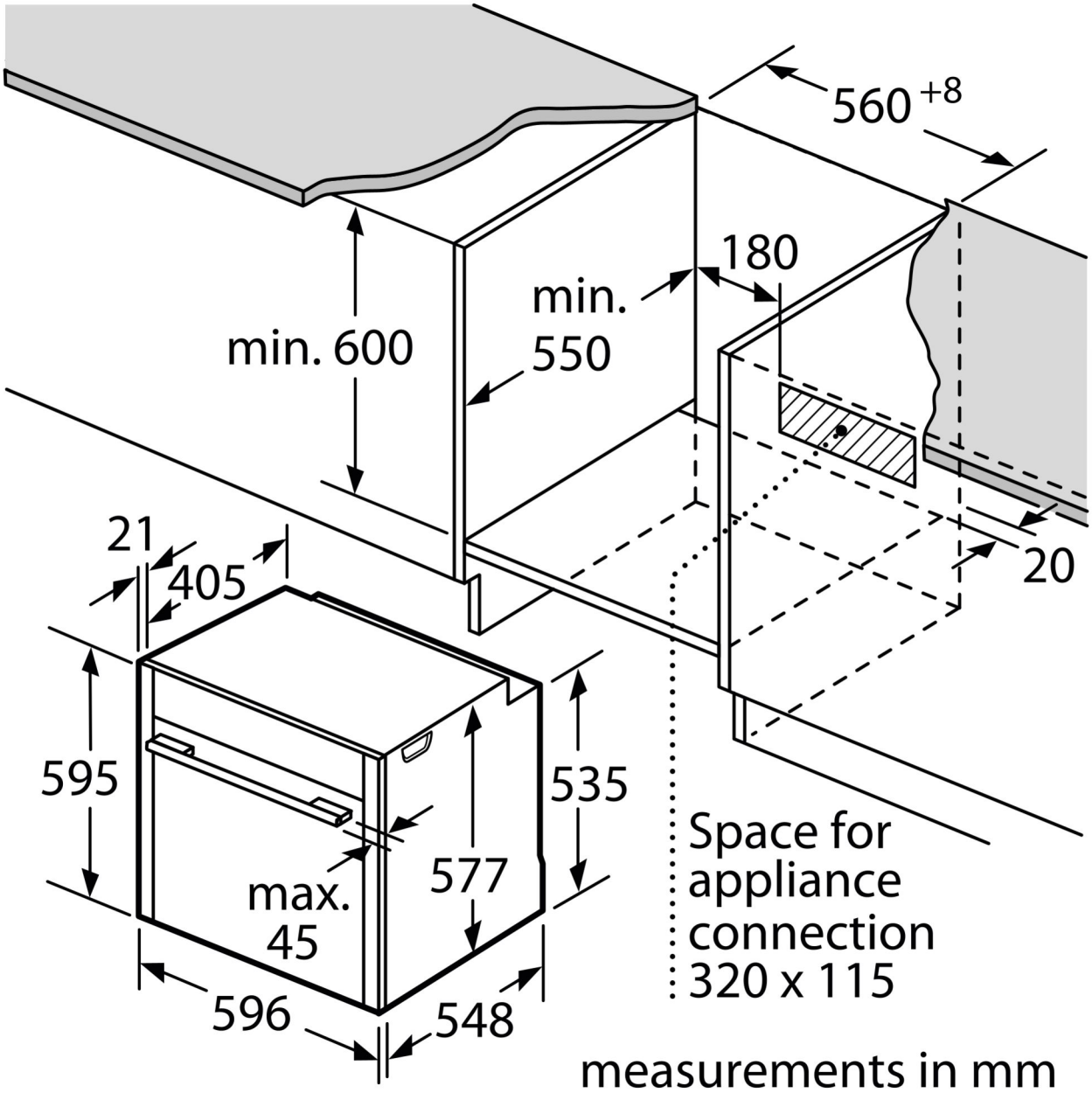
560 +8
180
min.
550
min. 600
20
21
405
595
535
577
max.
45
596
548
Space for
appliance
connection
320 x 115
measurements in mm