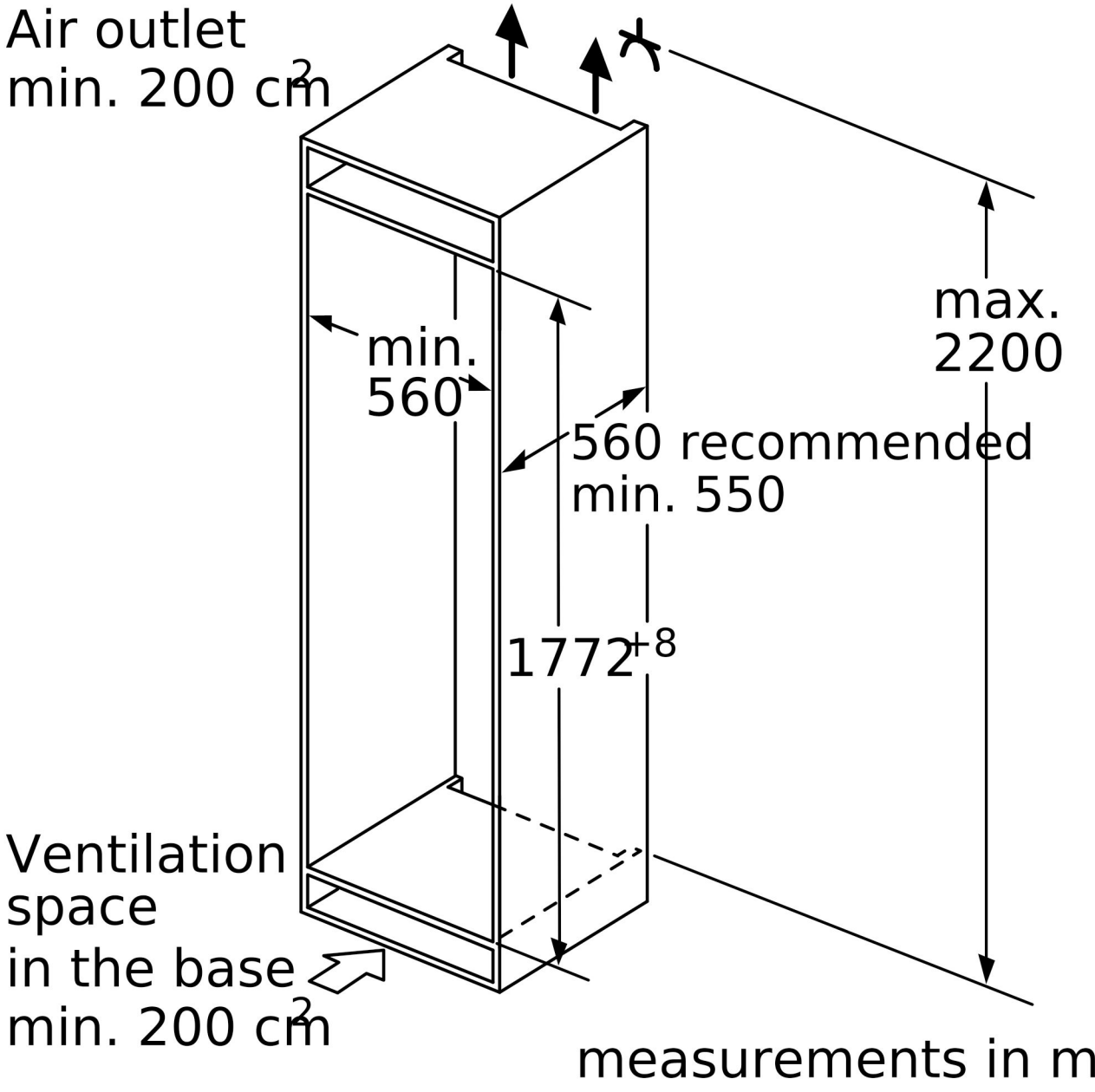
Air outlet
min. 200 cm2
min.
560
560 recommended
min. 550
max.
2200
1772+8
Ventilation
space
in the base
min. 200 cm2
measurements in m