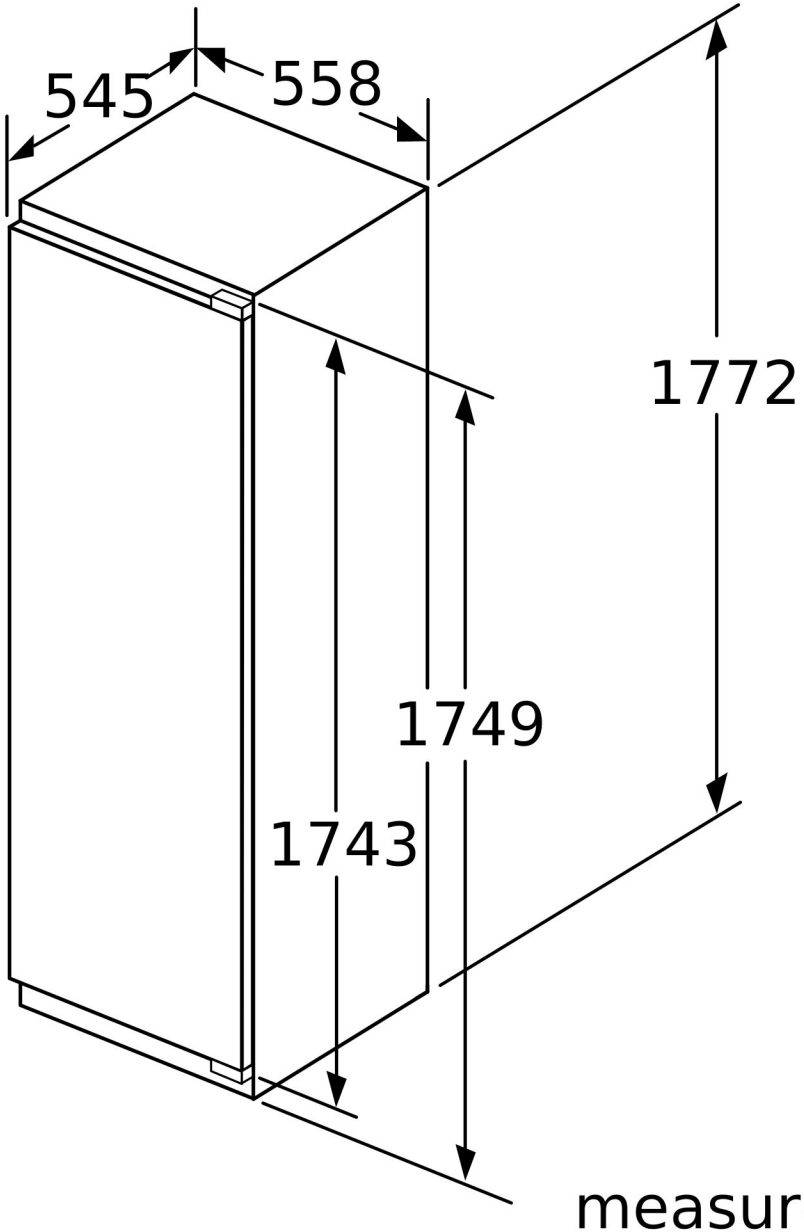

measurements in m