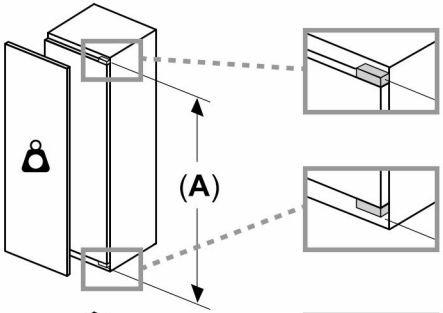

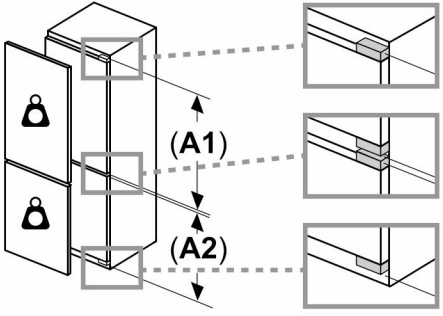

Maximal permissible weight of the unit fronts

Fitted unit fronts that exceed the permissible weight may cause damage and result in functional impairment of the hinges

Weight

A: Appliance door height including hinges in mm

B: Undamped hinge, unit front in kg

C: Damped hinge, unit front in kg

D: Additional possible load in kg with heavy load kit

A	B	C	D
1500-1750	22	22	B+5 / C+5
720-1400	19	19	
A1	15	19	
A2	15	19	