Maximal permissible weight of the unit fronts

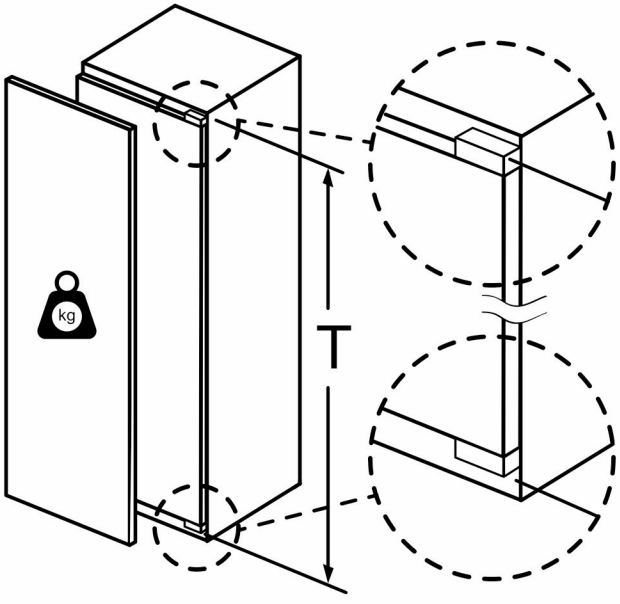

Fitted kitchen unit doors that exceed the permissible weight may cause damage and result in functional impairment of the hinges.

T: Includes height of appliance door Hinges in mm:	undamped hinge, Door in kg:	damped hinge, Door in kg:
1500-1750	22	22