February 2024

Field of Application Report

KFS Report PAR/10899/01 Revision J

Fire Resistance Standard: BS476: Part 22: 1987

Prepared for:

PKF Global Ltd

Assessed Product/System:

Three-Layer Particleboard Leaves, With or Without Feature Grooves, Installed in Timber Frames

Assessed Performance:

30 Minutes Fire Resistance

Issue Date	Expiry Date
February 2024	February 2027

Partner for Progress

Kiwa Fire Safety Compliance
Ground Floor, Suite A, Building 2
Bear Brook Office Park
Walton Street
Aylesbury, Buckinghamshire
HP21 7GQ

+44 (0)1844 275500
uk.firesafety@kiwa.com

www.kiwa.co.uk

Kiwa Fire Safety Compliance

Kiwa Fire Safety Compliance is part of the **Kiwa UK Group**. The company is a specialist engineering consultancy delivering independent, honest and practical fire safety solutions to professionals across the built environment. The sought after fire safety advice protects life, preserves property and safeguards business continuity.

Formerly International Fire Consultants, the company was established in 1985 to provide high quality and impartial technical expertise concerning fire safety. Since then the team of highly qualified Fire Engineers and Fire Safety Professionals have continued to deliver robust, innovative and cost-effective fire safety solutions, including Assessments, Designs and Inspections.

Kiwa Fire Safety Compliance lend their insight and practical expertise for: Fire Safety Engineering, Fire Risk Management, Product Evaluation, Fire Life Safety Systems, Expert Witness Testimony and Fire Protection Training, to developments of all sizes and complexities; from residential, education and healthcare structures to sporting venues, airports and iconic heritage buildings, such as historical royal palaces and stately homes.

Recognised internationally as the go-to professionals in all aspects of fire safety, Kiwa Fire Safety Compliance is one of the world's leading fire engineering and solution providers, trusted by many of the most prestigious construction firms, architects and estate owners.

HEAD OFFICE/CORRESPONDENCE ADDRESS:
Kiwa Fire Safety Compliance
Ground Floor, Suite A, Building 2
Bear Brook Office Park
Walton Street
Aylesbury, Buckinghamshire
HP21 7GQ

+44 (0)1844 275500
uk.firesafety@kiwa.com

REGISTERED ADDRESS:
International Fire Consultants Limited
Kiwa House
Malvern View Business Park
Stella Way, Bishops Cleeve
Cheltenham
GL52 7DQ

Registered No: 2194010

Private and Confidential

This report should not be manipulated, abridged or otherwise presented without the written consent of Kiwa Fire Safety Compliance.

Report Reference Number:	KFS Report PAR/10899/01 Revision J
Prepared on behalf of:	PKF Global Ltd
Address:	Unit 2, Devonshire Business Park Chester Road Borehamwood Hertfordshire WD6 1NA
Issue Date:	February 2024
Issue Date:	February 2027
Ref ID:	#24970

Issue and Amendment Record

REV	DATE	AUTHOR	REVIEW	SECTION	AMENDMENTS
-	November 2011	PG	DC	-	–
A	December 2013	PP	DC	All	Inclusion of additional groove detail and MDF frames
B	February 2015	PP	DC	-	Inclusion of alternative lipping detail
C	December 2015	DC	DI	All	Inclusion of additional door designs and associated changes
D	June 2019	MB	CPH	All	Review and Revalidation. Update to current IFC format. Revised scope to suit latest industry protocols. Additions and edits following client comments. Add diagonal grooves and Figure for Holdenby design.
E (#15430)	September 2019	MB	CPH	Sections 4.5, 4.8 and Appendix B	Addition of approval for Pyroguard C730 glass, and Sealmaster Foam Glazing Tape. Minimum thickness of softwood frames reduced to 30mm. Addition of approval for letter plates.
F (#20999)	February 2022	CPH	DC	All	Review and Revalidation. Update to current IFC format. Revised scope to suit latest industry protocols. Incorporation of additional test evidence
G (#20999)	April 2022	CPH	DC	Section 4.5	Slight amendment to the feature groove parameters
H (#23570)	August 2022	CPH	DC	All	Update to current IFC format and alternative door frame and lock specification added from test CFR1611081
I (#23570/ #24190)	August 2023	CPH	DC	All	Update to current KFS format and add alternative door core composition from test CFR1106291
J (#24970)	February 2024	CPH	DC	Appendix B	Alternative lock models added from test TR20230926-001107

Contents

1. Introduction 6

2. Test Evidence 6

3. Scope of Approval 7

3.1 Door Assembly Configurations 7

3.2 Maximum Assessable Door Leaf Sizes 7

4. Door Constructional Details 8

4.1 Leaf Construction 8

4.2 Door Lippings 9

4.3 Decorative Leaf Facings 10

4.4 Decorative Leaf Finishes 11

4.5 Feature Grooves 11

4.6 Transommed Overpanels 16

4.7 Door Frames 17

4.8 Glazed Apertures 20

4.9 Hardware 24

4.10 Installation and Supporting Construction 24

4.11 Gap Sealing 25

4.12 Intumescent Seals 27

4.13 Ambient Temperature Smoke Seals 27

5. Limitations 28

6. Validity 29

7. Declaration by the Applicant 30

Appendix A Leaf Size Envelopes and Intumescent Specifications 31

Appendix B Installation of Hardware 36

B.1 Single Axis Hinges 36

B.2 Mortice Locks/Latches 37

B.3 Tubular Latches 38

B.4 Door Closers 39

B.4.1 Surface Mounted Door Closers 39

B.5 Flush Bolts 39

B.6 Push/Kick Plates 40

B.7 Lever Handles 40

B.8 Escutcheons 40

B.9 Surface Mounted Pull Handles 41

B.10 Door Selectors 41
B.11 Dropseals 41
Appendix C Summary of Fire Test Evidence 42

1. Introduction

This report has been prepared by Kiwa Fire Safety Compliance (KFS), on the instruction of PKF Global Ltd, to define the Field of Application for the three-layer particleboard leaves, with or without feature grooves, installed in timber frames, that are required to provide 30 minutes fire resistance performance, when adjudged against BS476: Part 22: 1987.

This assessment has been produced using the principles outlined in the Passive Fire Protection Forum (PFPF): 'Guide to Undertaking Technical Assessments of the Fire Performance of Construction Products Based on Fire Test Evidence, 2021, Industry Standard Procedure'.

When establishing the variations in the construction that can achieve the required fire resistance performance, KFS complies with the principles found in the following documents:

- *BS ISO/TR 12470-2: 2017 'Fire resistance tests - Guidance on the application and extension of results from tests conducted on fire containment assemblies and products. Part 2: Non-load bearing elements'.*
- *EN 15725: 2023 'Extended application reports on the fire performance of construction products and building elements'.*

It is proposed that variations to the tested specifications, as described in the following sections, may be accommodated into door assemblies, without reducing their potential to achieve a 30 minute integrity rating, if tested in accordance with the method and criteria of BS476: Part 22: 1987.

The omission of information on any components or manufacturing methods does not imply a lack of approval of those details, but these would need to be the subject of a separate analysis. Only variations specifically mentioned are supported by this assessment document, all other aspects must otherwise be as proven in tests summarised herein.

It is more onerous to test timber door assemblies, hinged or pivoted, with the specimen installed with the leaf opening in towards the furnace. Testing in this orientation is therefore incorporated into Field of Application Reports to cover doors opening in the opposite direction. The principle is only applicable when the door construction, and any features within the door leaf, such as glazing, are symmetrical.

Unless stated otherwise, herein, this Field of Application considers the scope of approval for door assemblies that may be installed in either orientation, that being with either face exposed to fire conditions.

2. Test Evidence

The test evidence used to support this Field of Application Report is summarised in Appendix C of this report.

Some of the test evidence referenced in this Engineering Assessment Report is more than 5 years old. In accordance with industry practice, KFS have reviewed this test evidence, and have concluded that the evidence is still valid, and suitable to form the basis of this approval.

3. Scope of Approval

3.1 Door Assembly Configurations

GENERAL REQUIREMENTS/NOTES
• The table below provides an overview of the approved door assembly configurations when using a typical FD30 three-layer particleboard leaf, with or without feature grooves, installed in timber frames. • Figures A01 to A04 in Appendix A outline the full scope of door assembly configurations approved by this report. • Optional transomed overpanels are permitted across all of the door assembly configurations approved for use with timber door frames.

CONFIGURATION	
DESCRIPTION	CODE
Latched, Single Acting, Single Leaf (With or Without Transommed Overpanel)	LSASD
Unlatched, Single Acting, Single Leaf (With or Without Transommed Overpanel)	ULSASD
Latched, Single Acting, Double Leaf (With or Without Transommed Overpanel)	LSADD
Unlatched, Single Acting, Double Leaf (With or Without Transommed Overpanel)	ULSADD

3.2 Maximum Assessable Door Leaf Sizes

This Field of Application Report is based on fire resistance tests conducted on the FD30 three-layer particleboard leaf, with or without feature grooves, which have been analysed using the empirically derived, non-construction specific methodologies which form the basis of KFS's analysis. These methodologies allow the data obtained from the fire test evidence to be evaluated to determine permissible door leaf sizes, without any additional enhancements.

The calculated envelopes of assessed leaf dimensions for each door assembly configuration covered by this Field of Application report are given in Appendix A.

Double door assemblies may each be of the same width, up to the maximum width indicated in Appendix A. For unequal pairs there is no limit on the ratio of leaf widths, (although the large leaf must still be within the limitations in Appendix A). The width of the small leaf shall not be less than 250mm, since this will affect its vertical stability relative to that of the larger leaf.

4. Door Constructional Details

Constructional specifications for the FD30 three-layer particleboard leaf, with or without feature grooves, can be found in the tables below.

Timber must have a minimum measured density at 15% moisture content. The timber must be straight grained and of appropriate quality in accordance with BS EN 942: 2007. The moisture content shall be 11 ± 2% for UK market, (or to suit internal joinery moisture content specification of export countries).

4.1 Leaf Construction

4.1.1 Leaf Thickness

MINIMUM LEAF THICKNESS
44mm

ADDITIONAL REQUIREMENTS/NOTES
• The dimension above excludes the thickness of the decorative leaf facings detailed in Section 4.4 • There are two alternative options for the leaf construction, both of which are covered by the same leaf size envelopes in Appendix A • The maximum leaf sizes referenced in Appendix A assume that each layer of core, (and facings in Option 1), shall be formed from one piece, and joints shall not be used to achieve an increase in leaf height /width. If the core/facing materials are not available at a size to suit the maximum leaf sizes defined in Appendix A, then a reduced leaf size will be determined by the available core/facing materials

4.1.2 Option 1

COMPONENT		MATERIAL	DIMENSIONS	MINIMUM DENSITY
Core	Inner layer	Particleboard	13mm thick	550kg/m^3
	Outer layers		13mm thick	
Facings		MDF	2.5mm thick	700kg/m^3
Adhesives	Between layers of core	PVA adhesive	-	-
	Facings	Urea formaldehyde or PVA adhesive		

4.1.3 Option 2A

COMPONENT		MATERIAL	DIMENSIONS	MINIMUM DENSITY
Core	Inner layer	Particleboard	12mm thick	550kg/m^3
	Outer layers		15.5mm thick	
Adhesives	Between layers of core	PVA adhesive	-	-

4.1.4 Option 2B

COMPONENT		MATERIAL	DIMENSIONS	MINIMUM DENSITY
Core	Inner layer	Particleboard	15mm thick	550kg/m^3
	Outer layers		14.5mm thick	
Adhesives	Between layers of core	PVA adhesive	-	-

4.2 Door Lippings

4.2.1 General

LOCATION	MATERIAL	MINIMUM DENSITY	MINIMUM THICKNESS	PROFILE	LIPPING ADHESIVE
Vertical leaf edges	Solid and finger-jointed hardwood	640kg/m^3	Refer to Section 4.2.2	Refer to Section 4.2.2	Urea formaldehyde, PVA or vinyl urethane-based
Door leaf horizontal and overpanel edges	Solid or finger-jointed hardwood	640kg/m^3	Refer to Section 4.2.2	Refer to Section 4.2.2	Urea formaldehyde, PVA or vinyl urethane-based

ADDITIONAL REQUIREMENTS/NOTES
• Lippings must be installed on all four leaf edges • Installed lippings may be reduced in thickness for site installation purposes, provided the minimum lipping thickness detailed in Section 4.2.2 is maintained • There must be no gaps present between the stiles/rails and the lippings • Lippings may be concealed under the MDF facing (in option 1 design) or by the decorative facings (both option 1 and 2 designs), or be exposed (both option 1 and option 2 designs)

4.2.2 Lipping Thicknesses and Edge Profiles

VERTICAL LEAF EDGES			HORIZONTAL LEAF AND OVERPANEL EDGES
JUST SOLID HARDWOOD		SOLID + FINGER JOINTED HARDWOOD	SOLID OR FINGER JOINTED HARDWOOD
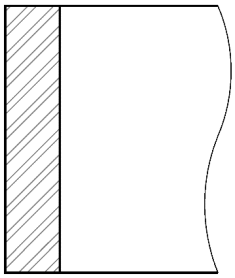	or	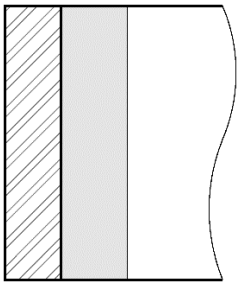	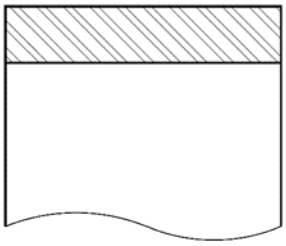
PERMITTED LIPPING LOCATION			
All door leaf vertical edges. Just solid hardwood or Finger-jointed hardwood bonded to the door core and solid hardwood covering the finger-jointed hardwood			All door leaf horizontal and overpanel edges
LIPPING THICKNESS			
4.5-20mm thick		9-20mm (total)	8-15mm
ADDITIONAL REQUIREMENTS/NOTES			
Each lipping element to be a minimum 4.5mm thick			

4.3 Decorative Leaf Facings

COMPONENT/AREA	MATERIAL	MAXIMUM THICKNESS
Leaf faces only	Timber Veneer	2mm
	High Pressure Laminate	2mm
	PVC Laminates (e.g. Acrovyn)	2mm
	Paper	1mm
	Decorative Foil	0.5mm

ADDITIONAL REQUIREMENTS/NOTES
• Decorative facing materials must not be applied to the leaf edges • With the exception of push/kick plates (See Appendix B.5), metallic facings are not permitted

4.4 Decorative Leaf Finishes

COMPONENT/AREA	MATERIAL	MAXIMUM THICKNESS
Leaf faces and leaf edges	Paint	0.5mm, or a maximum of 5 coats whichever is greater.
	Lacquer	
	Varnish	

4.5 Feature Grooves

The proposed door leaf designs can incorporate feature grooves machined into both leaf faces

4.5.1 Option A - With Hardwood Inserts (Can be used with Door Option 1 or 2)

Typical Feature Groove Profiles

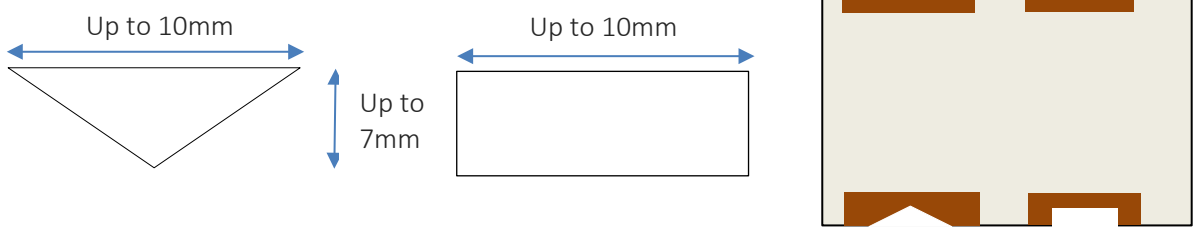

Maximum Size	Harwood Insert	24mm wide x 10mm thick	12mm wide x 8mm thick
	Feature groove	10mm wide x 7mm deep	8mm wide x 4mm deep
Groove Quantity/ Orientation /Margins	Vertical Grooves	Maximum 4no. grooves which may extend to the top and bottom leaf edges Or Maximum 6no. grooves which must not extend to the top and bottom leaf edges but stop 100mm from the horizontal edges In both circumstances, the vertical grooves must be a minimum 90mm in from the vertical leaf edges and minimum 50mm apart	
	Horizontal Grooves	Maximum 6no. which must not extend to the vertical leaf edges, but stop 90mm in from the vertical leaf edges – minimum 90mm in from the horizontal leaf edges and minimum 275mm apart	
Approved Leaf Size and Configurations		Approved for inclusion on unlatched and latched, single and latched, double leaf configurations on all leaf sizes covered within this Field of Application Report	
Additional Notes		• Horizontal and vertical grooves may intersect each other • Hardwood inserts adhered in place using PVAc adhesive • Hardwood for inserts can be solid or finger-jointed with a minimum density of 750kg/m^3 • Grooves for the hardwood inserts are machined directly into the leaf face, either before or after the decorative face veneer is applied	
Test Evidence		CFR 2009211 + CFR1106291	

4.5.2 Option B – With Hardwood Inserts (Can be used with Door Option 1 or 2)

Typical Feature Groove Profiles

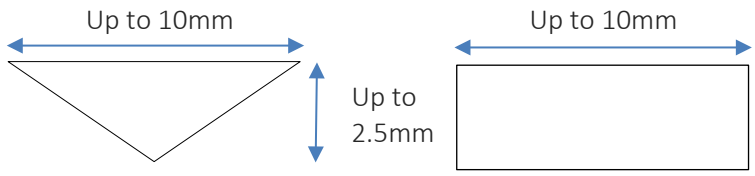

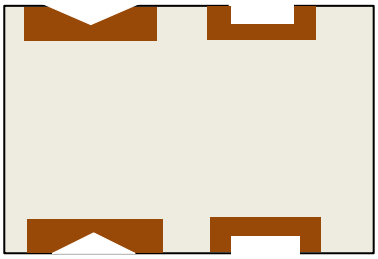

Maximum Size	Harwood Insert	23mm wide x 7.5mm thick
	Feature groove	10mm wide x 2.5mm deep
Groove Quantity/ Orientation /Margins	Vertical Grooves	Maximum 6no. grooves. The grooves nearest the vertical leaf edges may extend to the top and bottom leaf edges, the remaining grooves to stop 90mm short of the leaf head – minimum 90mm in from the vertical leaf edges and minimum 100mm apart
	Horizontal Grooves	Maximum 6no. which must **not** extend to the vertical leaf edges, but stop 90mm in from the vertical leaf edges – minimum 90mm in from the horizontal leaf edges and minimum 350mm apart
Approved Leaf Size and Configurations		Approved for inclusion on unlatched and latched, single and latched, double leaf configurations on all leaf sizes covered within this Field of Application Report
Additional Notes		• Horizontal and vertical grooves may intersect each other • Hardwood inserts adhered in place using PVAc adhesive • Hardwood for inserts can be solid or finger-jointed with a minimum density of 750kg/m^3 • Grooves for the hardwood inserts are machined directly into the leaf face, either before or after the decorative face veneer is applied
Test Evidence		WF 350734 + CFR 2009211

4.5.3 Without Hardwood Inserts (Option 1 Door Design Only)

Typical Feature Groove Profile

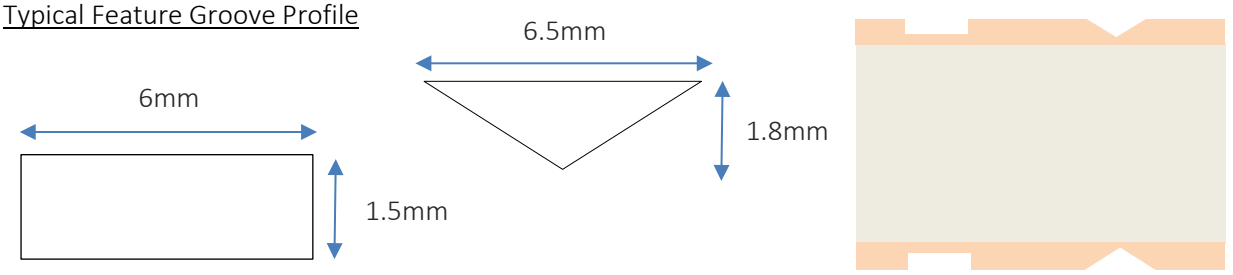

Maximum Size	Harwood Insert	Not applicable - grooves are machined directly into the veneered MDF leaf facing	
	Feature groove	Rectangular	Maximum 6mm wide x 1.5mm deep
		V-shaped	Maximum 6.5mm wide x 1.8mm deep
Groove Quantity/ Orientation /Margins	Vertical Grooves	Maximum 4no. grooves which may extend to the top and bottom leaf edges Or Maximum 6no. grooves which must not extend to the top and bottom leaf edges but stop 120mm from the horizontal edges In both circumstances, the vertical grooves must be a minimum 120mm in from the vertical leaf edges and minimum 70mm apart	
	Horizontal Grooves	Maximum 6no. which must not extend to the vertical leaf edges, but stop 120mm from the vertical leaf edges	
Approved Leaf Size and Configurations		Approved for inclusion on unlatched and latched, single leaf configurations and latched, double leaf configurations on all leaf sizes covered within this Field of Application Report	
Additional Notes		• Horizontal and vertical grooves may intersect each other • Alternatively, a decorative plastic trim may be inserted into a maximum 2mm deep x 2mm wide groove in the leaf face which may also incorporate a decorative metal cover to the face of the trim	
Test Evidence		CFR 1503101 and CFR 2106041 with over-run	

4.5.4 Combination with and without Hardwood Inserts (Option 1 Door Design Only)

<table>
<tr><td colspan="3">Typical Feature Groove Profile
 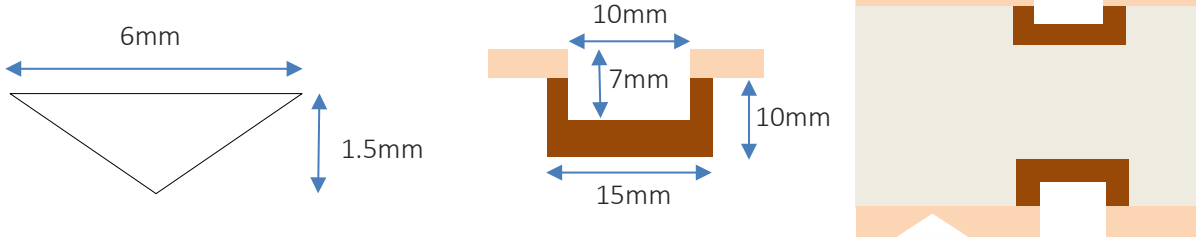
</td></tr>
<tr><td rowspan="2">Maximum Size</td><td>Harwood Insert With Groove</td><td>15mm wide x 10mm thick hardwood insert recessed into the leaf core - maximum 10mm wide x 7mm deep groove</td></tr>
<tr><td>Feature Groove With No Insert</td><td>Maximum 6mm wide x 1.5mm deep</td></tr>
<tr><td rowspan="2">Groove Quantity/ Orientation /Margins</td><td>Harwood Insert With Groove</td><td>Maximum 5no. horizontal grooves which may extend to the vertical leaf edges – minimum 180mm from the horizontal leaf edges and minimum 380mm apart</td></tr>
<tr><td>Feature Groove With No Insert</td><td>Maximum 4no. horizontal which may extend to the vertical leaf edges – minimum 380mm from the horizontal leaf edges
Maximum 2no. vertical which may extend to the horizontal leaf edges – minimum 220mm from the vertical leaf edges</td></tr>
<tr><td colspan="2">Approved Leaf Size and Configurations</td><td>Approved for inclusion on unlatched and latched, single leaf configurations and latched, double leaf configurations on all leaf sizes covered within this Field of Application Report</td></tr>
<tr><td colspan="2">Additional Notes</td><td>• Horizontal and vertical grooves may intersect each other
• Hardwood inserts adhered in place using urea formaldehyde adhesive
• Hardwood for inserts can be solid or finger-jointed with a minimum density of 750kg/m^3
• Grooves for the hardwood inserts are machined directly into the leaf core prior to being faced with MDF</td></tr>
<tr><td colspan="2">Test Evidence</td><td>CFR 2106041 with over-run</td></tr>
</table>

4.5.5 Diagonal Grooves

DIAGONAL GROOVES	
• This leaf design may be used as either a single or double, latched door, but the grooves must not clash with hardware at the leaf edges • This option may be used either with or without hardwood inserts to the specifications outlined in Sections 4.5.1 - 4.5.3	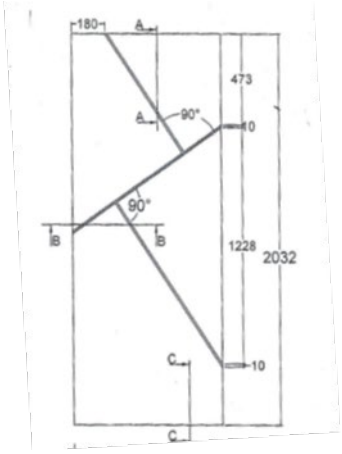

4.6 Transommed Overpanels

4.6.1 Overpanel Size, Configuration and Specification

GENERAL REQUIREMENTS/NOTES
Overpanels must be of the same construction as the door leaf (refer to Section 4.1) and be lipped on all four edges with hardwood (refer to Section 4.2.2)

MAXIMUM OVERPANEL SIZE	
SINGLE DOOR ASSEMBLIES	DOUBLE DOOR ASSEMBLIES
1500mm high	1000mm high

FRAME MATERIAL OPTIONS	APPROVED LEAF CONFIGURATIONS
Softwood or hardwood (Minimum density 468kg/m^3)	Single or double leaf
MINIMUM TRANSOM SIZE	**TRANSOM JOINT**
70mm wide x 32mm thick	Mortice and tenon or trench joint
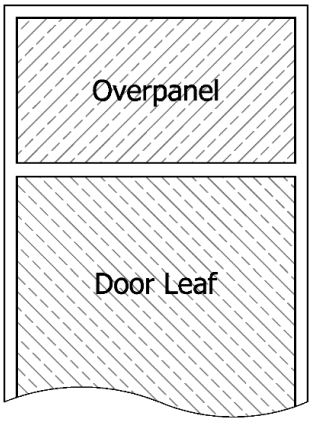	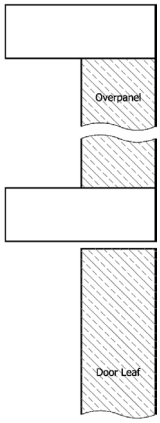

4.6.2 Overpanel Fixing

FIXING REQUIREMENTS		
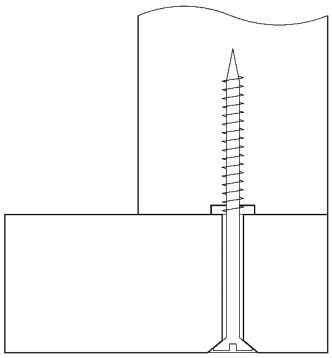	Minimum Screw Size	5mm x 70mm
	Minimum Quantity of Fixings	2no. screws per overpanel edge
	Fixing Positions	Maximum 100mm from each corner and on maximum 400mm centres thereafter
	Fixing Penetration	Minimum 40mm of screw penetration into overpanel edge

4.7 Door Frames

4.7.1 Head Joints

- The frame head must be secured to each jamb using 2no. minimum 5mm x 80mm screws
- In addition to screw fixings, mitred joints must also be glued with cross-linking adhesive e.g. urea formaldehyde, polyurethane or resorcinol formaldehyde

MORTICE AND TENON JOINT	HOUSED JOINT
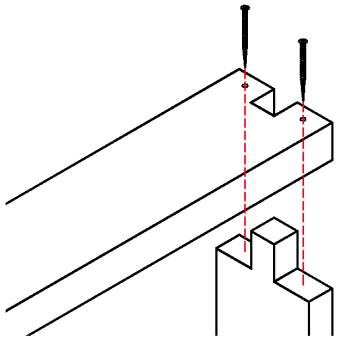	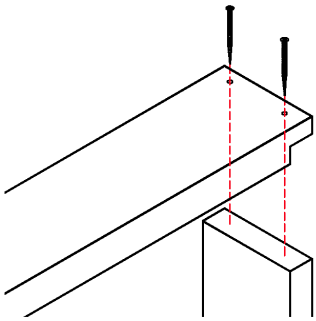
OMEC JOINT	**MITRED JOINT**
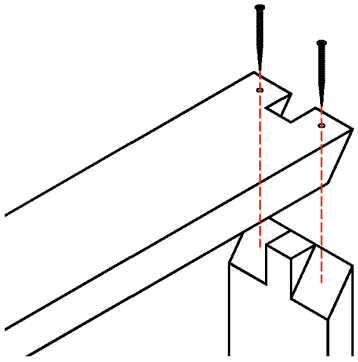	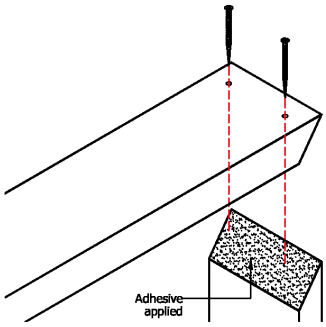

4.7.2 Specifications and Profiles

FRAME PROFILE F30/1		
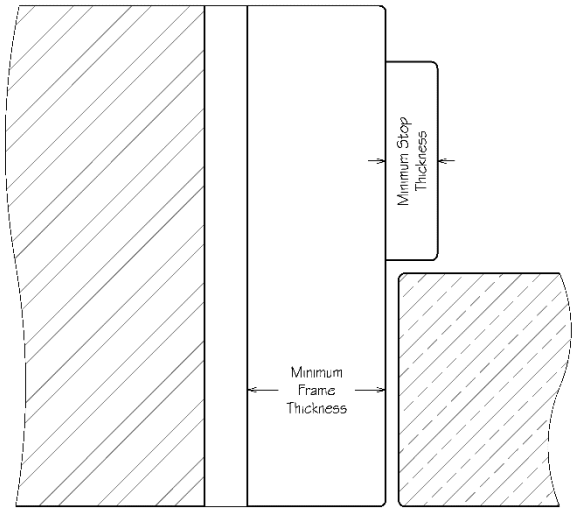		
Frame Material		Softwood, Hardwood or MDF
Minimum Density	Softwood or Hardwood	468kg/m³
	MDF	700kg/m³
Minimum Thickness		30mm
Minimum Frame Depth		70mm
Minimum Stop Thickness		12mm
Additional Requirements/Notes		
• The minimum frame thickness detailed above excludes the door stop • The doorstop is to comprise the same material as the door frame and must fixed in place using 40mm long steel pins at maximum 300mm centres • Architraves are optional– refer to Section 4.11 for gap sealing/firestopping requirements		

FRAME PROFILE F30/2		
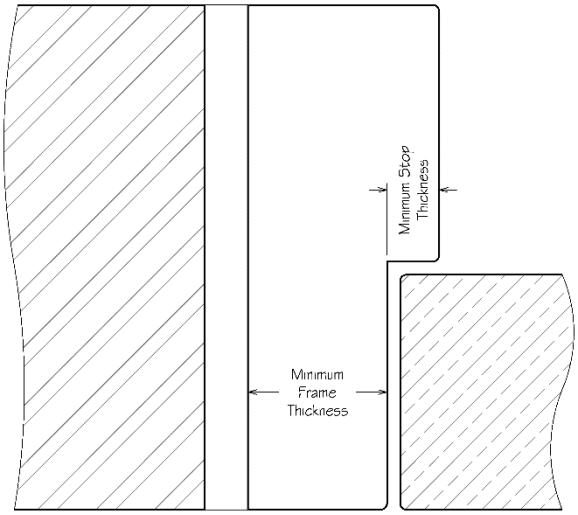		
Frame Material		Softwood, Hardwood or MDF
Minimum Density	Softwood and Hardwood	468kg/m³
	MDF	700kg/m³
Minimum Thickness		30mm
Minimum Frame Depth		70mm
Minimum Stop Thickness		12mm
Additional Requirements/Notes		
• The minimum frame thickness detailed above excludes the integral door stop. • Architraves are optional – refer to Section 4.11 for gap sealing/firestopping requirements		

FRAME PROFILE F30/3	
Frame Material	Softwood or Hardwood
Minimum Density	450kg/m³
Minimum Thickness	30mm
Minimum Frame Depth	70mm
Minimum Stop Thickness	25mm

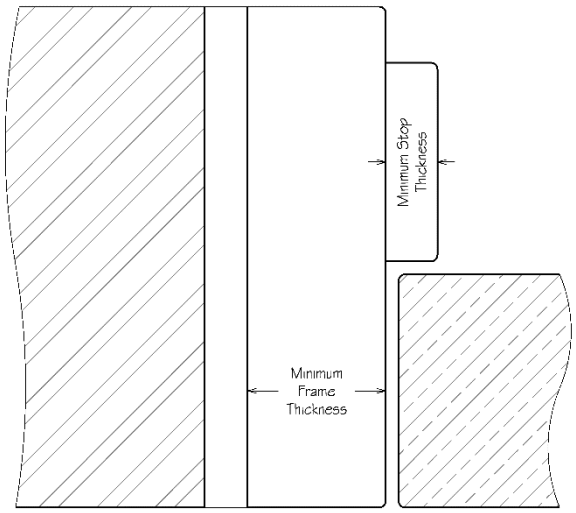

Additional Requirements/Notes

- The minimum frame thickness detailed above excludes the door stop
- The doorstop is to comprise the same material as the door frame and must fixed in place using 40mm long steel pins at maximum 300mm centres
- Architraves are optional– refer to Section 4.11 for gap sealing/firestopping requirements

4.7.3 Split Frames

GENERAL REQUIREMENTS/NOTES
The overall frame depth may be increased by utilising split frames, but the joint between the two frame sections must not intrude into the minimum frame depth as stipulated in Section 4.7.2

SPLIT FRAME

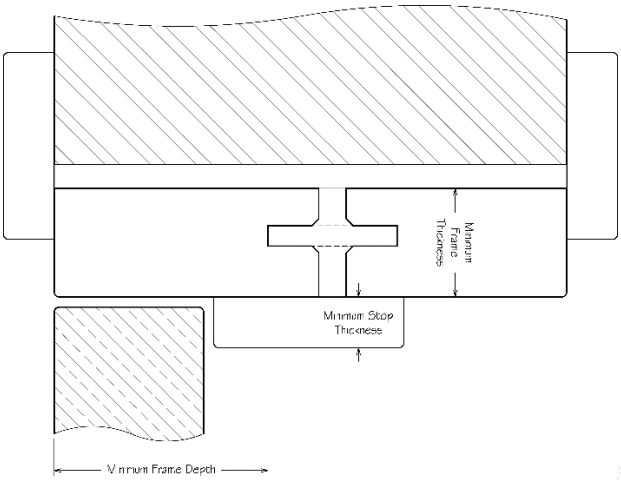

4.7.4 Decorative Finishes

DECORATIVE FINISHES	
MATERIAL	MAXIMUM THICKNESS
Paint	0.5mm, or a maximum of 5no. coats, whichever is greater
Varnish	
Lacquer	

4.8 Glazed Apertures

4.8.1 General

GENERAL REQUIREMENTS/NOTES
• The table in Section 4.8.3 outlines the permitted combinations of glass type, glazing system and bead profile • The maximum permitted glazed aperture dimensions are detailed within this table • Corresponding aperture widths/heights will need to be adjusted until the proposed aperture area falls within the maximum aperture area detailed within this table • The maximum aperture width and maximum aperture height must not be combined, as the resulting figure will always exceed the maximum permitted aperture area • Drawings for the approved glazing bead profiles along with the required bead fixing methods can be found in Section 4.8.4 • All glass is to be installed in accordance with the manufacturer's instructions for expansion allowance, setting blocks, silicone pointing etc • Glazed apertures greater than 0.57m^2 must include a 7mm hardwood (minimum density 600kg/m^3) liner adhered to the inside edge of the aperture, either between the 2.5mm MDF facings, set 2.5mm back from the leaf faces or flush with the leaf faces, adhered in position using either PU or UF adhesive

4.8.2 Aperture Margins

GENERAL REQUIREMENTS/NOTES		
Minimum distance from leaf edges	Head	155mm
	Vertical leaf edges	175mm
	Bottom edge	300mm
Minimum distance between apertures*	100mm	

*Multiple apertures are permitted providing the total glazed area does not exceed that stated in Section 4.8.3.

4.8.3 Glazed Apertures – Approved Glass Types, Glazing Systems and Bead Profiles

GLASS SPECIFICATION						DIMENSIONS				BEAD TYPES				GLAZING SYSTEMS			
Glass Reference	Glass Thickness (mm)	Glass Type	Manufacturer	Integrity (minutes)	Insulation (minutes)	Maximum Area of Single Aperture (m2)	Maximum Total Area of Multiple Apertures (m2)	Max Aperture Height x (corresponding aperture width) (mm)	Max Aperture Width x (corresponding aperture height) (mm)	B30/1	B30/2	B30/3 - MDF Beads	Mock Glazing Beads	Interdens – 10 x 2mm (Various)	Therm-A-Strip – 10 x 2mm Intumescent Seals Ltd	Therm-A-Glaze 45 – 10 x 2mm Intumescent Seals Ltd	Ceramic fibre tape – 13 x 3mm (Various)
G1	7	Pyroshield II	Pilkington	30	NPD	0.57	0.57	1629 (x 348)	474 (x 1195)	✓	×	×	×	✓	✓	✓	×
G2	7	Pyroguard C730	Pyroguard	30	NPD	0.66	0.89	1051 (x 629)	857 (x 771)	✓	×	×	×	✓	✓	✓	×
G3	7	Pyrobelite	Pilkington	30	NPD	0.89	0.89	1913 (x 464)	632 (x 1404)	✓	✓	✓	✓	✓	✓	✓	✓
G4	7.5	Pyrodur EW30-105	Pilkington	30	NPD	0.89	0.89	1913 (x 464)	632 (x 1404)	✓	✓	✓	✓	✓	✓	✓	✓
G5	7	Pyrosec EW 30/7 7	Promat Securiglass	30	NPD	0.89	0.89	1913 (x 464)	632 (x 1404)	✓	✓	✓	✓	✓	✓	✓	✓

4.8.4 Glazing Bead Profiles and Glazing Bead Fixings

GLAZING BEAD B30/1	BEAD MATERIAL
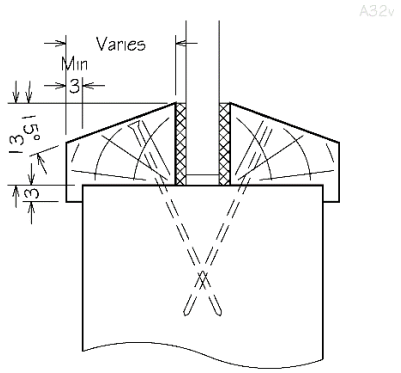	Hardwood (Minimum density 640kg/m^3)
	BEAD FIXINGS
	1.9mm x 50mm steel pins or 4mm x 50mm steel screws
	FIXING POSITIONS
	• Max 150mm centres and 50mm from corners • 30 degrees relative to the plane of the glass
	GLAZING SYSTEM
	Refer to Section 4.8.3
	ADDITIONAL REQUIREMENTS/NOTES
	None

GLAZING BEAD B30/2	BEAD MATERIAL
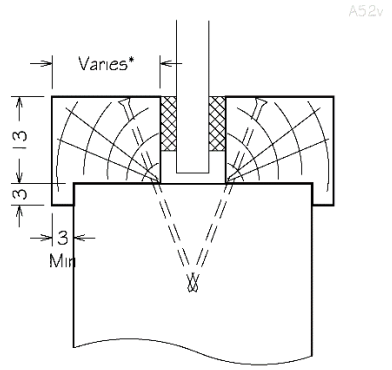	Hardwood (Minimum density 640kg/m^3)
	BEAD FIXINGS
	1.9mm x 50mm steel pins or 4mm x 50mm steel screws
	FIXING POSITIONS
	• Max 150mm centres and 50mm from corners • 30 degrees relative to the plane of the glass
	GLAZING SYSTEM
	Refer to Section 4.8.3
	ADDITIONAL REQUIREMENTS/NOTES
	None

GLAZING BEAD B30/3	BEAD MATERIAL
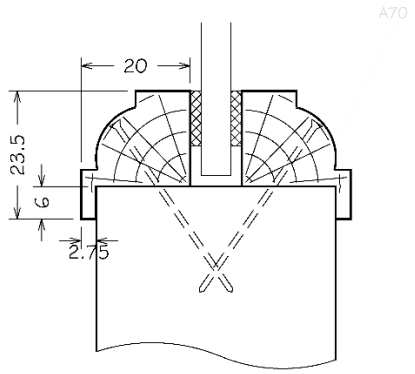	MDF (Minimum density 700kg/m^3) with optional hardwood veneer
	BEAD FIXINGS
	1.8mm x 50mm steel pins
	FIXING POSITIONS
	• Max 125mm centres and 50mm from corners • 30 degrees relative to the plane of the glass
	GLAZING SYSTEM
	Refer to Section 4.8.3
	ADDITIONAL REQUIREMENTS/NOTES
	None

'MOCK' GLAZING BEAD	BEAD MATERIAL
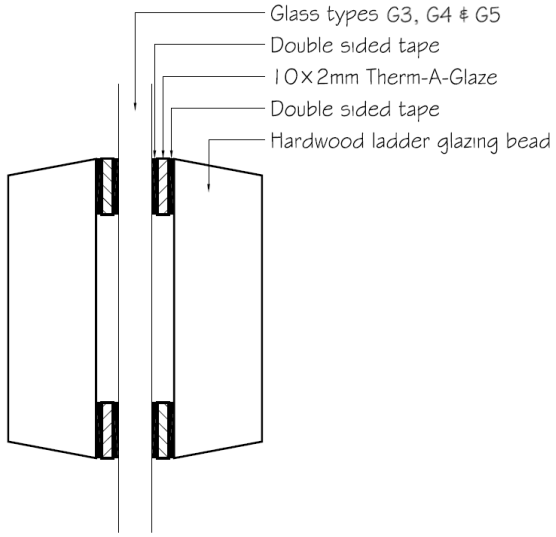 Or 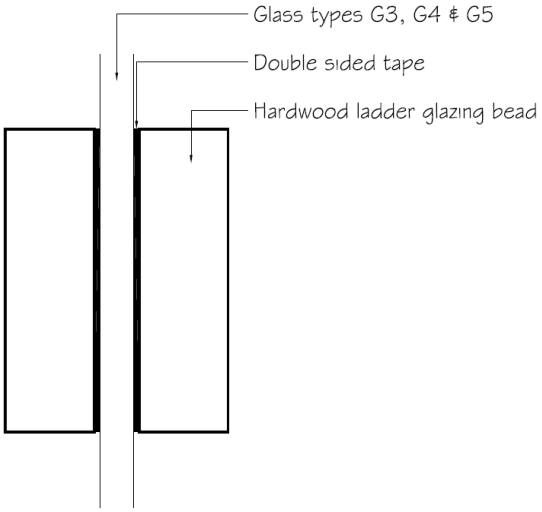	Hardwood (minimum density 640kg/m^3) **BEAD FIXINGS** 2no. 1.2mm x 40mm steel pins, securing the end of each glazing bar to the perimeter beads Or Double sided tape affixing the 'mock' beads to the face of the glass without any additional pin fixings at either end of the glazing bar **PIN FIXING POSITIONS (WHEN USED)** • 22mm centres either end of the glazing bar • 30 degrees relative to the plane of the glass **GLAZING SYSTEM (OPTIONAL)** Refer to Section 4.8.3 **ADDITIONAL REQUIREMENTS/NOTES** None

4.9 Hardware

Hardware items which are approved for use with the FD30 three-layer particleboard leaf, with or without feature grooves, are detailed in Appendix B of this report.

All hardware items must be installed in accordance with the manufacturer's instructions, except where specific installation requirements or limitations have been detailed by KFS.

4.10 Installation and Supporting Construction

SUPPORTING CONSTRUCTION
The supporting construction may be timber or steel stud plasterboard partition, blockwork, brickwork or concrete walls, but shall be of a type that has been tested or assessed to provide in excess of 30 minutes fire resistance, at the required size, when incorporating door openings. If fitted into timber or steel stud partitions, the method of forming the door assembly aperture must be as tested by the partition and/or door assembly manufacturer. *Note* *Any reference to steel stud partitions is in the context of permanent elements, such as those designed and proven by the plasterboard manufacturers – this report does not approve use of the proposed door assemblies in proprietary 'demountable' partitions, which must be subject to a full and independent appraisal of the particular system and door assemblies therein.*

DOOR FRAME FIXING REQUIREMENTS
Timber door frames must be fixed back to the supporting construction with steel fixings at centres not exceeding 600mm on the vertical edges (minimum 200mm from the top and bottom), and a minimum of one fitted centrally across the width of the frame head of double doors. Screws shall be of sufficient length to remain secure into the supporting construction during exposure to fire, and shall be positioned such that they are not exploited by charring of the frame. Therefore, screws must be located a minimum of 20mm in from the frame edge, unless a twin line of screws is used.

DOOR FRAME PACKERS
Packers shall be used at all fixing positions, although if combustible packers are employed, they must be cut short and be capped with a layer of approved mastic and maintain compliance with one of the approved back of frame sealing methods given in the following sections.

PROJECTING DOOR FRAMES/DOOR LEAVES
The approval in this report does not apply where the wall/partition includes decorative 'cladding' on the face of the fire-resisting construction, (e.g. timber panelling on battens, or plasterboard on dabs), such that any part of the frame is aligned within the plane of this decorative cladding.

ARCHITRAVES
Where the face of the frame is flush with the face of the wall, loose architraves are optional, and have no fire performance requirements, and so can be freely specified, subject to suitable gap sealing fire stopping as detailed in Section 4.11.2.

DOOR EDGE GAPS				
	Between Leaf & Frame	Leaf Meeting Stiles	Bottom of Door (Fire)	Bottom of Door (Fire & Smoke)
Gap Width	1.5mm to 4mm	1.5mm to 4mm	6mm	3mm*
**Gaps in excess of 3mm are permissible provided a suitable smoke seal is included*				

DOOR LEAF ALIGNMENT
The door assembly design shall be such that when closed, single acting leaves are fully flush with the face of the frame and the face of leaves in double door assemblies shall be flush with each other at meeting stiles when closed.

4.11 Gap Sealing

4.11.1 General

GENERAL REQUIREMENTS/NOTES
• Gap sealing products must meet <u>all</u> of the requirements detailed in Section 4.11.2

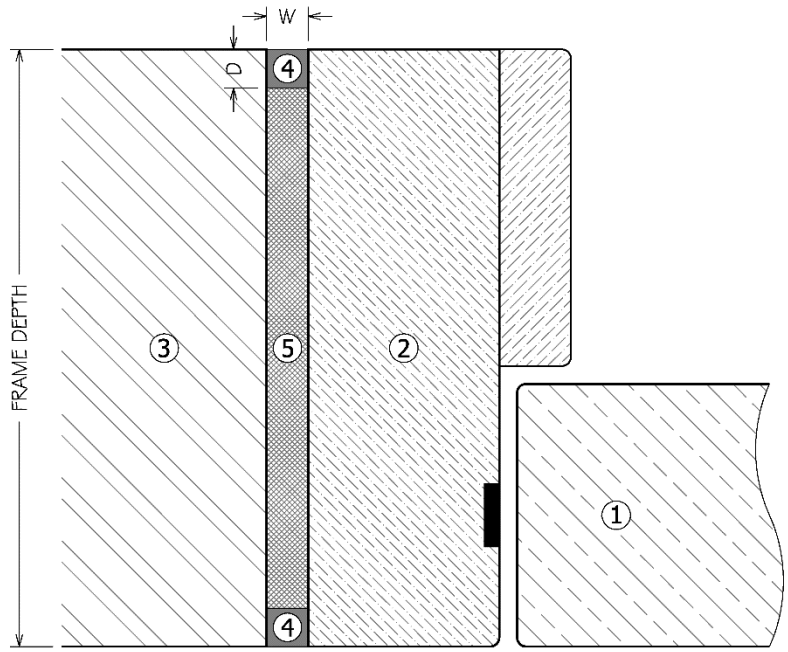

Key	
1	Door leaf
2	Door frame
3	Supporting construction (Masonry, steel/timber stud partition)
4	Gap sealant
5	Backing material
D	Depth of gap sealant
W	Width of gap/gap sealant

4.11.2 Gap Sealing Products – Requirements for Approval

GENERAL REQUIREMENTS				
Gap sealing products used in conjunction with the FD30 three-layer particleboard leaf, with or without feature grooves, must have been successfully fire tested for 30 minutes fire resistance in accordance with BS476: Part 22: 1987 or BS EN 1634-1: 2014. In addition, they must meet all of the requirements detailed below;				
FIRE TEST PRESSURE REGIME				
Must have been successfully fire tested when sealing a gap located above the neutral pressure axis				
SUPPORTING CONSTRUCTION				
Must have been successfully fire tested when sealing a linear gap between the rear of a timber frame and a steel/timber stud partition, or be representative of the substrate into which it is being used.				
GAP SIZE				
Must have been successfully fire tested when sealing a linear gap, equal to, or larger than, that proposed.				
SEALANT DEPTH				
Must be applied to a depth, equal to, or greater than, that used when it was fire tested and finish flush with the outer face of the door frame.				
BACKING MATERIAL				
TESTED BACKING MATERIAL	PERMITTED BACKING MATERIAL OPTIONS			
No backing material included	None	CC Polyethylene backing rod	Expanding FR PU foam*	Mineral rock fibre
Closed cell polyethylene backing rod		CC Polyethylene backing rod	Expanding FR PU foam*	Mineral rock fibre
Expanded FR PU foam			Expanding FR PU foam*	Mineral rock fibre
Mineral rock fibre				Mineral rock fibre only
* Must have been successfully fire tested when sealing a linear gap between the rear of a timber frame and a steel/timber stud partition, or be representative of the substrate into which it is being used.				
ARCHITRAVES				
TESTED ARCHITRAVE MATERIAL	PERMITTED ARCHITRAVE MATERIAL			
No architraves fitted	None fitted	MDF	Softwood	Hardwood
MDF		MDF		Hardwood
Softwood			Softwood	Hardwood
Hardwood				Hardwood

4.12 Intumescent Seals

INTUMESCENT SEAL TYPE	APPROVED MANUFACTURER/SUPPLIER	SIZE/POSITIONS
PVC encased graphite-based (e.g. Mann McGowan, Pyroplex or Astroflame) or Lorient 617 type seals	From any member of the Intumescent Fire Seals Association (IFSA) or from a company with Third Party Certification from a body such as IFC Certification Ltd	Refer to Appendix A

ADDITIONAL REQUIREMENTS/NOTES
Intumescent protection is also required to specific items of building hardware – refer to Appendix B

4.13 Ambient Temperature Smoke Seals

Smoke seals that have been tested in accordance with BS EN 1634-3: 2004 (ambient temperature) or BS476: Part 31: Section 31.1: 1983 and shown not to leak by more than $3m^3/m/hr$ at 25Pa may be used in conjunction with the proposed door assemblies to provide smoke control.

The orientation of the seals, door edge gaps, degree of hardware interruption, and leaf configuration, will need to be as tested in accordance with BS EN 1634-3: 2004 (ambient temperature) or BS476: Part 31: Section 31.1: 1983 to achieve the desired level of smoke control.

Test evidence to BS476: Part 22: 1987 shall be available to demonstrate that the smoke seals will not adversely affect the overall fire resistance of timber door assemblies, when fitted in the proposed arrangements.

5. Limitations

This report addresses itself solely to the ability of the proposed assemblies described to satisfy the criteria of the fire resistance test and does not imply any suitability for use with respect to other unspecified criteria.

This document only considers the door assemblies described, herein, and assumes that the surrounding construction will provide no less restraint than the tested assembly and that it will remain in place and be substantially intact for the full fire resistance period.

This report is issued on the basis of test data and information to hand at the time of issue. If contradictory evidence becomes available, KFS reserves the right to withdraw the report unconditionally but not retrospectively.

As per the guidance outlined in the Passive Fire Protection Forum (PFPF): '*Guide to Undertaking Technical Assessments of Fire Performance of Construction Products Based on Fire Test Evidence, 2021, Industry Standard Procedure'*, appropriate action has been taken to mitigate the risk of a conflict of interest arising during the preparation of this report. All individuals involved in the production, or subsequent review, of this assessment have declared any perceived conflicts of interest, with regards to the sponsor or subject(s) of this report, prior to working on this project.

The assessor and reviewer have been deemed suitable for involvement in the production of this assessment in accordance with the guidance outlined in the Passive Fire Protection Forum (PFPF): '*Guide to Undertaking Technical Assessments of Fire Performance of Construction Products Based on Fire Test Evidence, 2021, Industry Standard Procedure'.*

Where the constructional information in this report is taken from details provided to Kiwa Fire Safety Compliance (KFS) and/or from fire resistance test reports referenced herein, it is, therefore, limited to the information given in those documents. It is necessarily dependent upon the accuracy and completeness of that information. Where constructional or manufacturing details are not specified, or discussed, herein, it should not, therefore, be taken to infer approval of variation in such details from those tested or otherwise approved.

The analysis and conclusions within this report are based upon the likely fire resisting performance of a complete door assembly that is manufactured and installed in accordance with this document, and offered for fire resistance testing in 'perfect' condition. In practice, management procedures must be in place in any building where the door assemblies are installed, to ensure that no parts of the assembly are damaged or faulty. Further, the doors must open and close without the use of undue force. The edge gaps/alignment of door leaves must be in accordance with the tolerances defined, herein, when the doors are closed. Any such shortfalls in respect to the condition of the assemblies will invalidate the approval by KFS and may seriously affect the ability of the assemblies to provide the required level of fire resistance performance. Determination of what constitutes wear or damage, and any corrective actions in order to return assemblies to the required condition, should only be carried out following consultation with the manufacturer and KFS.

This report applies to fire door assemblies that are evaluated to BS476: Part 22: 1987; which is an applicable test method currently referenced within guidance to Building Regulations in the United Kingdom, and in building codes in some other countries. However, KFS have a duty of care to advise that introduction of CE Marking may become compulsory for fire resisting doorsets marketed in the EU, during the validity period of this report; in which case, users should contact KFS for further details/advice.

Where the assessed constructions have not been subject to an on-site audit by Kiwa Fire Safety Compliance, it is the responsibility of anyone using this report to confirm that all aspects of the assemblies fully comply with the descriptions and limitations, herein.

Any materials specified in this report have been selected and judged primarily on their fire performance. KFS do not claim expertise in areas other than fire safety. Whilst observing all possible care in the specification of solutions, we would draw the reader's attention to the fact that during the construction and procurement process, the materials used should be subjected to more general examination regarding the wider Health and Safety, and CoSHH Regulations. Designers, manufacturers and installers are reminded of their responsibilities under the CDM Regulations; but particularly with regard to installation and maintenance of heavy or inaccessible items.

This assessment considers the fire resistance performance of the door assemblies when tested with the leaves in the closed position, within the frame reveal; either retained by the latch, or self-closing device, or locked shut, as applicable. The door assemblies will only provide the assessed fire performance when in a similar configuration; and it is the responsibility of the building occupants/owner to ensure that this is the case.

This report is provided to the sponsor on the basis that it is a professional independent engineering opinion as to what the fire performance of the construction/system would be should it to be tested to the named standard. It is KFS's experience that such an opinion is normally acceptable in support of an application for building approvals, certainly throughout the UK and in many parts of Europe and the rest of the world.

However, unless KFS have been commissioned to liaise with the Authorities that have jurisdiction for the building in question for the purpose of obtaining the necessary approvals, KFS cannot assure that the document will satisfy the requirements of the particular building regulations for any building being constructed.

It is, therefore, the responsibility of the sponsor to establish whether this evidence is appropriate for the application for which it is being supplied and KFS cannot take responsibility for any costs incurred as a result of any rejection of the document for reasons outside of our control. Early submittal of the Report to the Authorities will minimise any risks in this respect.

6. Validity

This Field of Application Report has been prepared based on Kiwa Fire Safety Compliance's present knowledge of the products described, the stated testing regime and the submitted test evidence. For this reason, anyone using this document after February 2027 should confirm its ongoing validity.

This Field of Application Report is not valid unless it incorporates the declaration by the applicant given in Section 8 duly signed by the applicant.

Prepared by:

Chris Houchen
BSc AIFireE
Associate Director of Product Evaluation
Kiwa Fire Safety Compliance
(part of the Kiwa UK Group)

Reviewed by:

David Cooper
BEng (Hons) AIMMM AIFireE ACABE
Director of Product Evaluation
Kiwa Fire Safety Compliance
(part of the Kiwa UK Group)

7. Declaration by the Applicant

KFS Engineering Assessment Report	PAR/10899/01 Revision J
Client	PKF Global Ltd

We the undersigned confirm that we have read and complied with the obligations placed on us by the

Passive Fire Protection Forum (PFPF) - Industry Standard Procedure 2021

'Guide to Undertaking Technical Assessments of Fire Performance of Construction Products Based on Fire Test Evidence'

- We agree to withdraw this assessment from circulation should the component or element of structure, or any of its component parts be the subject of a failed fire resistance test to the standard against which this assessment is being made.
- We understand that this assessment is based on test evidence and will be withdrawn should evidence become available that causes the conclusion to be questioned. In that case, we accept that new test evidence may be required.
- We are not aware of any information that could affect the conclusions of this assessment. If we subsequently become aware of any such information, we agree to ask the assessing authority to withdraw the assessment.

Signature	
Name	Pranav Patel
Position	Managing Director
Company Name	PKF Global Ltd
Date	28.02.2024

Appendix A Leaf Size Envelopes and Intumescent Specifications

DESCRIPTION	CODE
Latched, Single Acting, Single Leaf (With or Without Transommed Overpanel)	LSASD
Unlatched, Single Acting, Single Leaf (With or Without Transommed Overpanel)	ULSASD
Latched, Single Acting, Double Leaf (With or Without Transommed Overpanel)	LSADD
Unlatched, Single Acting, Double Leaf (With or Without Transommed Overpanel)	ULSADD

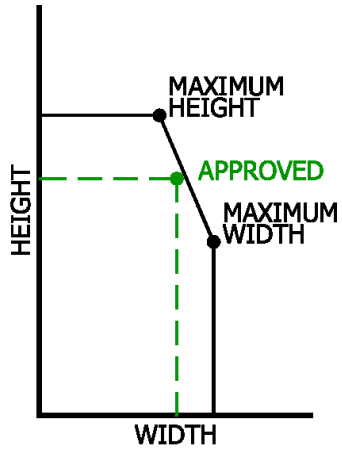

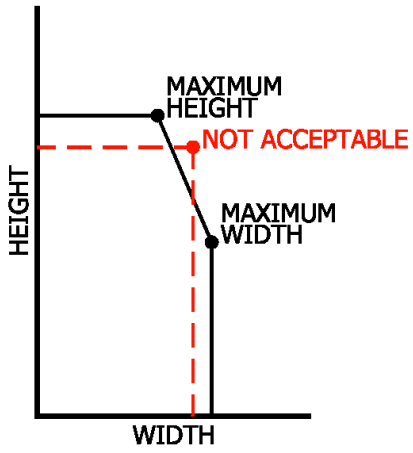

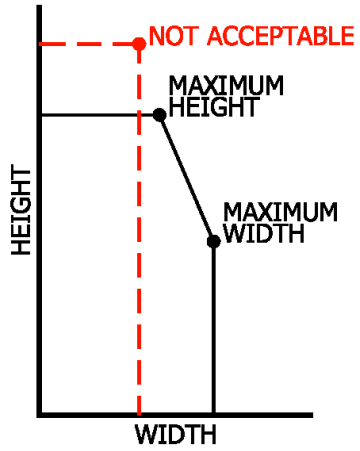

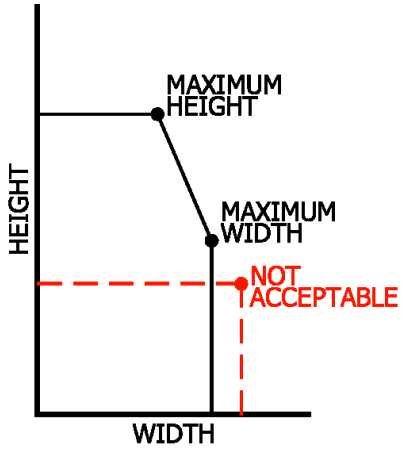

FIGURE A01	FD30	LATCHED SINGLE DOOR ASSEMBLIES

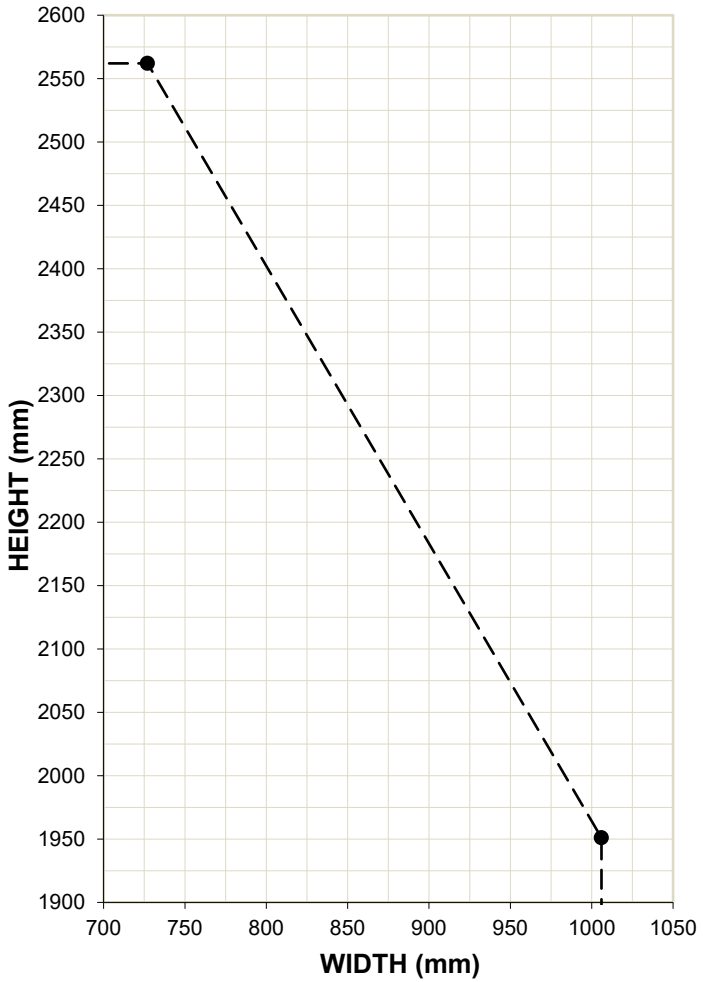

LSASD	– – – – – –

Leaf Configuration	Leaf Height	Leaf Width
LSASD	1951mm	1006mm
	2562mm	727mm

Flush Overpanel	Transomed Overpanel	Max Overpanel Height
×	✓	1500mm

Intumescent Specification	
Leaf Frame/Head	1no. 15 x 4mm intumescent seal centrally fitted in either the leaf head or opposing frame reveal (can be increased to 20 x 4mm if required)
Vertical Leaf Edges/Frame jambs	1no. 15 x 4mm intumescent seal centrally fitted in either the leaf edge or opposing frame reveal (can be increased to 20 x 4mm if required)

Note: For approved intumescent seal types, refer to Section 4.12

FIGURE A02	FD30	UNLATCHED SINGLE DOOR ASSEMBLIES

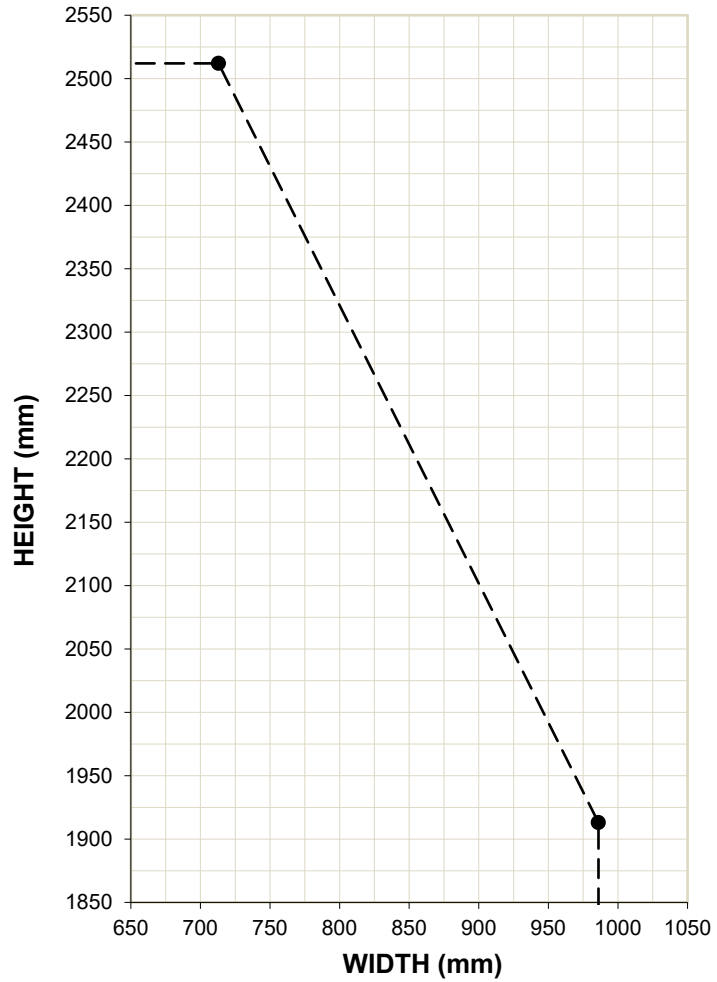

ULSASD	- - - - - -

Leaf Configuration	Leaf Height	Leaf Width
ULSASD	1913mm	986mm
	2512mm	713mm

Flush Overpanel	Transomed Overpanel	Max Overpanel Height
×	✓	1500mm

Intumescent Specification	
Leaf Frame/Head	1no. 15 x 4mm intumescent seal centrally fitted in either the leaf head or opposing frame reveal (can be increased to 20 x 4mm if required)
Vertical Leaf Edges/Frame jambs	1no. 15 x 4mm intumescent seal centrally fitted in either the leaf edge or opposing frame reveal (can be increased to 20 x 4mm if required)

Note: For approved intumescent seal types, refer to Section 4.12

FIGURE A03	FD30	LATCHED DOUBLE DOOR ASSEMBLIES

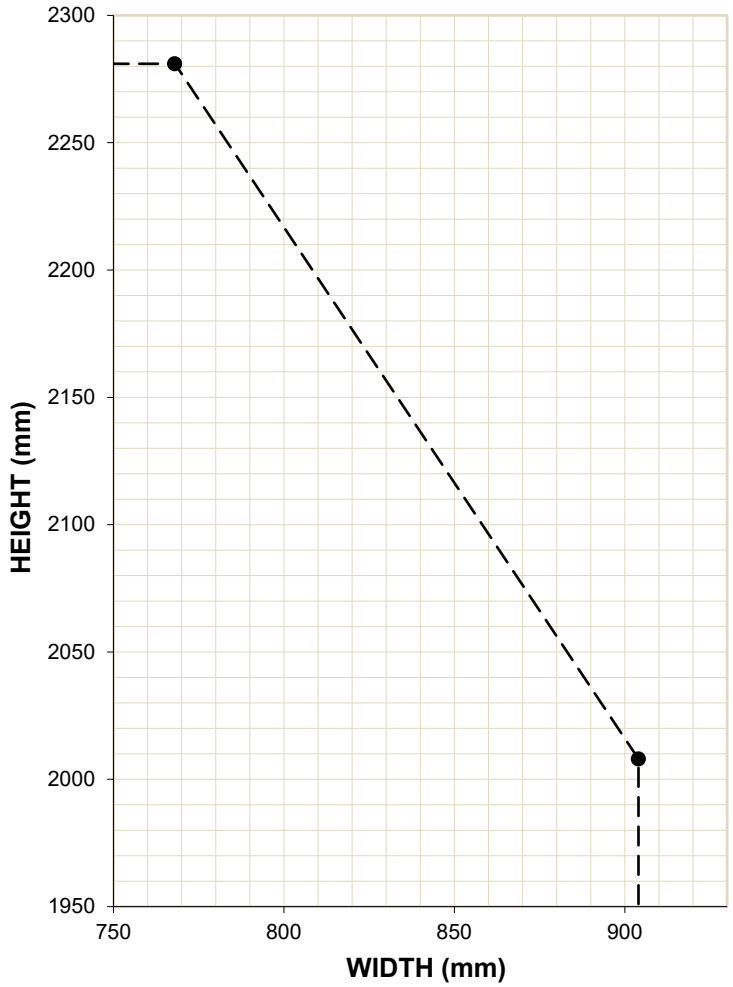

LSADD	- - - - - -

Leaf Configuration	Leaf Height	Leaf Width
LSADD	2008mm	904mm
	2281mm	768mm

Flush Overpanel	Transomed Overpanel	Max Overpanel Height
×	✓	1000mm

Intumescent Specification	
Leaf Frame/Head	1no. 20 x 4mm intumescent seal centrally fitted in either the leaf head or opposing frame reveal
Vertical Leaf Edges/Frame jambs	1no. 20 x 4mm intumescent seal centrally fitted in either the leaf edge or opposing frame reveal
Meeting edges	1no. 20 x 4mm intumescent seal centrally fitted in the closing edge of the active leaf only

Note: For approved intumescent seal types, refer to Section 4.12

FIGURE A04	FD30	UNLATCHED DOUBLE DOOR ASSEMBLIES

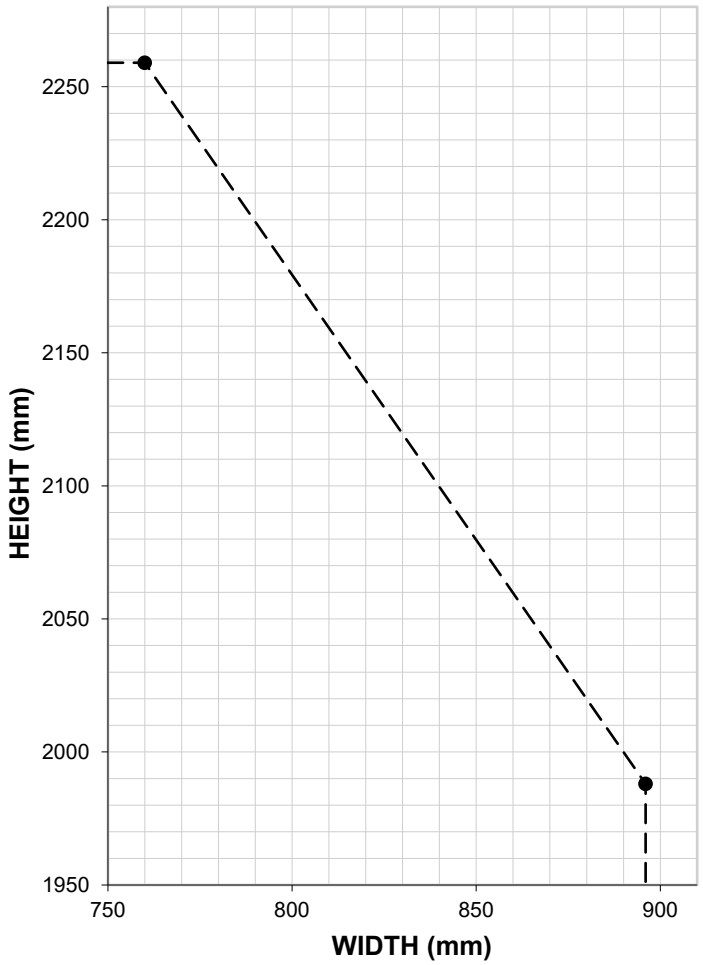

ULSADD	- - - - - -

Leaf Configuration	Leaf Height	Leaf Width
ULSADD	1988mm	896mm
	2259mm	760mm

Flush Overpanel	Transomed Overpanel	Max Overpanel Height
×	✓	1000mm

Intumescent Specification	
Leaf Frame/Head	1no. 20 x 4mm intumescent seal centrally fitted in either the leaf head or opposing frame reveal
Vertical Leaf Edges/Frame jambs	1no. 20 x 4mm intumescent seal centrally fitted in either the leaf edge or opposing frame reveal
Meeting edges	1no. 20 x 4mm intumescent seal centrally fitted in the closing edge of the active leaf only

Note: For approved intumescent seal types, refer to Section 4.12

Appendix B Installation of Hardware

B.1 Single Axis Hinges

ELEMENT		SPECIFICATION/QUANTITY/DIMENSIONS	
Tested Hinges		Royde and Tucker H105, Eclipse HNG0085, Rutland HA50017, Rutland RH.BB.4SQ.SS and Sparka HG1026.SSS	
Assessed Sparka Hinges		Sparka HG1012, Sparka HG1025, Sparka HG1013 and Sparka HG1010	
Hinge Types		Fixed pin, washered butt, ball bearing butt, lift-off type or journal supported	
Blade Height		89 - 110mm	
Blade Width		30 - 35mm	
Blade Thickness		2.5 - 3.5mm	
Material		Brass, Phosphor Bronze, Steel or Stainless Steel	
Fixings		Minimum 30mm long x 4mm diameter steel screws	
Minimum Number		Leaves up to 2200mm high	3no. hinges
		Leaves over 2200mm high	4no. hinges
Positions	3no	Top	125 - 175mm down from the leaf head to the top of the hinge
		Middle	Either equi-spaced between the top and bottom hinges or positioned 150 – 250mm below the top hinge
		Bottom	175 - 250mm up from the bottom of the leaf to the bottom of the hinge blade
	4no	Top	125 - 175mm down from the leaf head to the top of the hinge
		Second and Third	Either equi-spaced between the top and bottom hinges or second hinge positioned 150 – 250mm below the top hinge and the third hinge equi-spaced between the second and bottom hinge
		Bottom	175 - 250mm up from the bottom of the leaf to the bottom of the hinge blade
Intumescent Protection		Sparka hinges	1mm thick graphite fitted under all hinge blades (either supplied with hinges or sold separately)
		All other hinges	Non required
Additional Requirements/ Notes		• Rising butts, cranked butts and spring hinges are not approved under the scope of this Assessment • Single axis hinges must have been successfully type tested for conformity to all the requirements of BS EN 1935: 2002 including the additional requirements for fire/smoke door use • Single axis hinges must have a Door Mass Grade, as defined in BS EN 1935: 2002, which demonstrates the hinge is capable of supporting a door leaf weight, equal to, or greater than, that proposed.	

B.2 Mortice Locks/Latches

ELEMENT	SPECIFICATION/QUANTITY/DIMENSIONS	
Tested Locks/ Latches	Union Y-2242-63 2-lever mortice latch, Union Y2295 2-lever mortice latch, Rutland DIN Euro sash lock, Rutland RDL.L.55.SSSQ and Sparka LL1123.SSS 5-lever lock	
Assessed Sparka Locks/Latches	Sparka LL1118, LL1119 and LL1122 5-lever locks	
Latch/Lock Type	Mortice latches, sashlocks and deadlocks	
Maximum Forend Dimensions	235mm high x 22mm wide or 155mm high x 25mm wide	
Maximum Strike Plate Dimensions	235mm high x 24mm wide (excluding tongue) or 172mm high x 30mm wide (excluding tongue)	
Maximum Body Dimensions	165mm high x 80mm wide x 15mm thick or 115mm high x 80mm wide x 18mm thick	
Material	Steel based with no essential part of the lock/latch to comprise polymeric or other low melting point (<800°C) materials and should not contain any flammable materials	
Position	Centred at 1000mm (± 200mm) above the bottom of the door leaf	
Intumescent Protection	Forend/strike plate up to 155mm long or 22mm wide	None required
	Forend/strike plate more than 155mm long or 22mm wide	1mm thick graphite or Interdens/Therm-A-Strip intumescent sheet fitted under the lock forend and strike plate
	All Sparka locks/latches	1mm thick graphite encasing the lock/latch body, under the forend and strike plate and lining the inside base of a box keep (where applicable)
Additional Requirements/ Notes	• It is a condition of this assessment that there must be at least 50mm width of stile, or 'rail' between two apertures, between the lock/latch mortice and the glazed aperture. • Over-morticing is to be avoided; mortices shall be as tight as possible to the latch. • If there are gaps around the case (not exceeding 2mm) then these must be made good with intumescent mastic or sheet material. • Holes for spindles or cylinders shall be kept as small as is compatible with the operation of the hardware • Morticed locks/latches must have been successfully type tested for conformity to all the requirements of BS EN 12209: 2016 including the additional requirements for fire/smoke door use • Mortice lock/latches must have achieved the appropriate Grade in respect of suitability of use in fire resisting doors, as defined in BS EN 12209: 2016. This constitutes Grade B for latched door configurations and Grade N for unlatched door configurations	

B.3 Tubular Latches

ELEMENT	SPECIFICATION/QUANTITY/DIMENSIONS	
Tested Tubular Latches	Arrone LAL0076 HD tubular latch, Sparka LL2030.SCP HD tubular latch and Sparka LL2026.NPL tubular latch	
Assessed Sparka Tubular Latches	LL2033 & LL2011 tubular latches and LL2035 & LL2013 heavy duty tubular latches	
Latch Type	Tubular mortice latches	
Maximum Forend Dimensions	61mm high x 26.5mm wide	
Maximum Strike Plate Dimensions	65mm high x 28mm wide (excluding tongue)	
Maximum Body Dimensions	25mm high x 79mm wide x 18mm thick	
Material	Steel based with no essential part of the lock/latch to comprise polymeric or other low melting point (<800°C) materials and should not contain any flammable materials	
Position	Centred at 1000mm (± 200mm) above the bottom of the door leaf	
Intumescent Protection	Non-Sparka tubular latches	None required
	All Sparka tubular latches	1mm thick graphite encasing the lock/latch body, under the forend and strike plate
Additional Requirements/ Notes	• It is a condition of this assessment that there must be at least 50mm width of stile, or 'rail' between two apertures, between the lock/latch mortice and the glazed aperture. • Over-morticing is to be avoided; mortices shall be as tight as possible to the latch. • If there are gaps around the case (not exceeding 2mm) then these must be made good with intumescent mastic or sheet material. • Holes for spindles or cylinders shall be kept as small as is compatible with the operation of the hardware • Morticed locks/latches must have been successfully type tested for conformity to all the requirements of BS EN 12209: 2016 including the additional requirements for fire/smoke door use • Mortice lock/latches must have achieved the appropriate Grade in respect of suitability of use in fire resisting doors, as defined in BS EN 12209: 2016. This constitutes Grade B for latched door configurations and Grade N for unlatched door configurations	

B.4 Door Closers

GENERAL REQUIREMENTS/NOTES
Every hinged fire door (both leaves in double doors), including flat entrance doors and doors between a dwelling and an integral garage, must be fitted with a self-closing device, with the exception of the following; • Fire doors which are normally kept locked shut and labelled with an appropriate sign which complies with BS5499: Part 1: 1990 • Fire doors to cupboards • Fire doors within flats or dwellings KFS recommends that the fire strategy for the proposed project is reviewed, as this may detail specific requirements for door closing devices, which takes precedence over the details outlined above. This report evaluates the fire resistance performance of the doors assemblies when tested with the leaves in the closed position, within the frame reveal; either retained by the latch, or door closing device, or locked shut, as applicable. If no door closing device is fitted, good management practice must be in place to ensure the doors are fully closed into the frame reveal when not in use. All door closing devices must be fitted according to the manufacturer's instructions (unless stipulated otherwise herein) and be adjusted so that they are capable of fully closing the door leaf, against any friction imposed by the latch (and smoke seals, if fitted), from any position of opening.

B.4.1 Surface Mounted Door Closers

GENERAL REQUIREMENTS/NOTES	
Surface mounted door closers must have been fire tested or assessed by KFS for use on FD30 timber door leaves hung within timber frames	
Tested Closers	Rutland TS.11204, TS.11205, TS.3204 and TS.5204, Dorma TS68, Assa Abloy DC110 and Briton 2003 SES

B.5 Flush Bolts

ELEMENT	SPECIFICATION/QUANTITY/DIMENSIONS
Tested Flush Bolts	Jedo JV5640BSC
Maximum Size	152mm long x 19mm wide x 19-37mm deep
Material	Steel based with no essential part of the flush bolt to comprise polymeric or other low melting point (<800°C) materials and should not contain any flammable materials
Position	• Positioned at the top and bottom of the vertical meeting edge • Must be located on the centre line of the leaf thickness
Intumescent Protection	None required
Additional Notes	None

B.6 Push/Kick Plates

ELEMENT	SPECIFICATION/QUANTITY/DIMENSIONS
Maximum Dimensions	Maximum 0.2m^2 per leaf face in any orientation
Fixing	• Mechanically fixed with short screws • Glued with a thermally softening adhesive (e.g. contact adhesive)
Material	Steel or aluminium
Intumescent Protection	None required
Additional Notes	• Must be cut short of door stops but may be located under the handle rose/ escutcheons • Push/kick plates must be surface fixed only. These items must not be recessed into the leaf face

B.7 Lever Handles

ELEMENT	SPECIFICATION/QUANTITY/DIMENSIONS	
Tested Handle Models	Frelan Hardware JVCP0030, Sparka HA1422.SSS (Jennie), Sparka HA1413.SCP (Hugo) and Sparka HA1423.SSS (Duanne)	
Assessed Sparka Handles	Sparka HA1417 (Jennie), Sparka HA1412 (Hugo) and Sparka HA1418 (Duanne)	
Material	Spindle	Steel
	Handle Body	Steel or aluminium
Position	Faced fixed to one, or both faces, of the door leaf to suit the lock/latch position	
Intumescent Protection	None required	
Additional Notes	• This generic approval only applies to traditional 'mechanical' lever handles and does not apply to electro-mechanical handle sets which are not permitted under the scope of this assessment • Handles must not contain, or be wrapped in, flammable materials	

B.8 Escutcheons

ELEMENT	SPECIFICATION/QUANTITY/DIMENSIONS
Tested Escutcheon Model	Sparka HA1020.SSS
Material	Stainless steel
Dimensions	54mm diameter x 4.5mm thick
Position	Faced fixed to one, or both faces, of the door leaf to suit the keyhole position
Intumescent Protection	None required
Additional Notes	None

B.9 Surface Mounted Pull Handles

ELEMENT	SPECIFICATION/QUANTITY/DIMENSIONS
Max Dimensions	Fixing points must be no greater than 800mm apart
Material	Steel or aluminium
Intumescent Protection	Bolt-through fixings must be wrapped in 1mm thick Interdens/Therm-A-Strip or graphite based intumescent sheet material
Additional Notes	Pull handles that are fixed through the leaf shall use clearance holes as close fitting as possible to the intumescent wrapped bolt

B.10 Door Selectors

ELEMENT	SPECIFICATION/QUANTITY/DIMENSIONS
Max Dimensions	No restrictions
Material	Steel or aluminium
Position	Surface mounted to the door leaf or frame
Intumescent Protection	None required
Additional Requirements/Notes	The installation of the door selector must not involve the removal of any material from the door leaf or door frame

B.11 Dropseals

ELEMENT	SPECIFICATION/QUANTITY/DIMENSIONS
Position	Bottom leaf edge - Fitted centrally in the leaf thickness.
Maximum Dimensions	35mm high x 14mm thick x full width of leaf
Intumescent Protection	Mortise lined with 1mm thick Interdens/Therm-A-Strip or graphite based intumescent sheet material

Appendix C Summary of Fire Test Evidence

TEST REPORT	TEST SPONSOR	TEST LAB	TEST DATE	CONFIGURATION	LEAF SIZE	TEST STANDARD	RESULT	ITEMS/DETAILS SUPPORTED BY TEST EVIDENCE
CFR 1106291	PKF Global Ltd	Cambridge Fire Research	29/06/ 2011	ULSADD (opening in)	2040mm x 826/826mm x 42.5-43mm	BS476: Part 22: 1987	23 minutes* (33 minutes test terminated)	• 3no. particleboard (550kg) core (14.5/15/14.5mm thick) = 43mm • 24x10mm Oak inserts with 10x5mm groove, 2no. vertical + 2no. horizontal • 33mm thick softwood (468-653kg) door frame with 12mm stop • Oak (750-800kg) lips - vertical edges 10mm+6mm in 2 pieces, horizontal edges 8-10mm finger jointed • 1406x390mm glazed ap, 7.3mm Pyroshield II glass + sapele chamfered bolection beads (40mm x 1.8mm pins @140mm centres @ 30degs to glass) + System 36 glazing channel(left leaf) Therm-A-Glaze 45(right leaf) • R&T H105 hinges/152x22mm forend latch(101/61/15mm body)/Dorma TS68 surface closer/152x37x19mm disengaged flush bolts • 20x4mm Lorient 617 intu in frame reveal + passive meeting edge
WF 350734	PKF Global Ltd	Warrington Fire	27/08/ 2015	ULSASD (opening in)	1981mm x 838mm x 44mm	BS476: Part 22: 1987	36 minutes	• 3no. particleboard (700kg) core (3x13mm thick) = 39mm + 2.5mm thick MDF facing • 23x7.5mm Oak inserts with 10x2.5mm groove (120mm from vert edges/117mm from head/185mm from bottom) • 27mm thick softwood (532kg) door frame with 13mm stop • Hardwood lips – 10mm vertical edges only, finger jointed and between MDF facings • Eclipse 101x31mm blade hinges/60x25mm forend tubular latch (74/23/15mm body)/Assa Abloy surface closer • 10x4mm Astroflame AF1004FS intu in frame reveal
CFR 1503101/01	PKF Global Ltd	Cambridge Fire Research	10/05 2015	ULSASD	1981mm x 839mm x 44mm	BS476: Part 22: 1987	45 minutes	• 3 layers of particleboard (total 38thick) + 3mm thick MDF facing • 30mm thick softwood (470kg) door frame with 25mm stop • Meranti lips to all leaf edges 19-20mm vert edges + 8-12mm horiz edges • 4.5mm wide x 1.8mm deep 'V' grooves in MDF facing (130mm from edge) and horizontally between vertical grooves) • Glazed aperture lined with 7mm meranti (between facings) • 1516 x 478mm glazed ap, 7.9mm Pyrosec EW 30/7 glass + sapele chamfered (45degree) bolection beads (40mm x 1.8mm pins @110-150mm centres @ 30degs to glass) + 10x2mm TAGlaze 45 • 44mm wide x 16-21.5mm thick Sapele 'mock' horizontal glazing bars, with/without intumescent, with/without pin fixings • R&T H105 hinges/152x22mm forend latch(101/62/14mm body)/Briton surface closer • 15x4mm Astroflame AF1504FO intu in frame reveal

** Premature failure occurred at 23 minutes due to ignition of the glazing beads in the left hand aperture. There was no leaf perimeter failure upon test termination at 33 minutes.*

TEST REPORT	TEST SPONSOR	TEST LAB	TEST DATE	CONFIGURATION	LEAF SIZE	TEST STANDARD	RESULT	ITEMS/DETAILS SUPPORTED BY TEST EVIDENCE
CFR 1301221	PKF Global Ltd	Cambridge Fire Research	22/01/13	ULSADD	1982mm x 771/ 771mm x 45mm	BS476: Part 22: 1987	38 minutes	• 30 x 71mm MDF (752kg) door frame with 12mm stop
CFR 1101201	PKF Global Ltd	Cambridge Fire Research	20/01/11	ULSASD	2040mm x 927mm x 44mm	BS476: Part 22: 1987	30 minutes	• 914 x 337mm glazed ap, 7.5mm Pyrobelite glass + MDF (700-750kg) profiled bolection beads (40mm x 1.8mm pins @125-135mm centres @ 30degs to glass) • Therm-A-Glaze 45 intumescent between bead and glass
CFR 2009211	PKF Global Ltd	Cambridge Fire Research	21/09/20	ULSASD (Door B only)	2040mm x 926mm x 44mm	BS476: Part 22: 1987	36 minutes (No failure)	• 3no. layers of particleboard (550kg) core (15.5/12/15.5mm thick) = 43mm • 15x10 + 12x8mm Oak inserts with 10x7 + 8x4mm grooves, 4no. full height vertical and 6no. horizontal (not full width) • 30mm thick softwood (500kg) door frame with 12mm stop • Hardwood lips – 6mm solid oak to vertical edges + 10mm finger jointed oak to horizontal edges, glued using PVA • Rutland 101x30mm blade hinges(1mm Interdens) + Rutland 233x22mm forend latch(1mm Interdens) + 180x24strike(1mm Interdens) + 165/80/14mm body+1mm Interdens) + Rutland TS.11204.SR surface closer • 15x4mm Pyroplex intu in frame reveal
CFR 2106041	PKF Global Ltd	Cambridge Fire Research	04/06/21	ULSASD (Door A only)	2039mm x 925mm x 43mm	BS476: Part 22: 1987	48 minutes (No failure)	• 3no. layers of particleboard (550kg) core (13/13/13mm thick) = 39mm, UF glued + 3mm thick MDF (700kg) faces, UF glued + 0.13mm laminate faces, UF glued • 5no. horizontal grooves formed using 15x10mm Oak(750kg) inserts (under MDF) with 10x7mm 'U' grooves, full width, 200mm from top/bottom and equally spaced between • 4no. full width horizontal (403mm from top/bottom) and 5no. 403mm long vertical grooves (235mm from leaf vertical edges between horizontal V grooves) 6x1.5mm 'V' • 30mm thick x 70mm deep softwood (480kg) door frame with 12mm stop • Hardwood lips(750kg) – 39mm wide, 2no. 10mm solid oak to vertical edges + 1no. 10mm oak to horizontal edges, glued using UF between the MDF faces • Rutland 102x31mm blade hinges(1mm Interdens) + Rutland 235x22mm forend latch (1mm Interdens) + 180x24strike(1mm Interdens) + 165/81/14mm body (1mm Interdens) + Rutland TS.11205.SR surface closer • 15x4mm Mann McGowan intu in frame reveal
Chilt/ RF10070	CGI International Ltd	Chiltern Int'l Fire Ltd	27/05/10	LSASD	2040mm x 915mm x 44mm	BSEN 1634-1: 2008 & BSEN 1363-1: 1999	33 minutes	• 44mm thick European redwood (510kg) door leaf • 7mm Pyroguard Clear glass 900mm x 710mm • 15mm high sapele beads with 21 degree chamfer fixed 50mm long screws, 70 from corners and at 200mm centres • 10x2mm Interdens

TEST REPORT	TEST SPONSOR	TEST LAB	TEST DATE	CONFIGURATION	LEAF SIZE	TEST STANDARD	RESULT	ITEMS/DETAILS SUPPORTED BY TEST EVIDENCE
Chilt/ RF02106	Glaverbel (UK) Ltd	Chiltern Int'l Fire Ltd	19/02/03	ULSASD	2135mm x 915mm x 44mm	BSEN 1634-1: 2000 & BSEN 1363-1: 1999	37 minutes	• 44mm thick European redwood (510kg) door leaf • 7mm Pyrobelite 1835mm x 715mm • 15mm high sapele beads with 15 degree chamfer fixed 50mm long screws, 50 from corners and at 150mm centres • 12 x 3mm Papier Superwool X607 ceramic fibre tape
BMT/FEP/F 16200	Pilkington	EXOVA Warrington fire	05/07/16	ULSASD	2140mm x 900mm x 44mm	BSEN 1634-1: 2014 & BSEN 1363-1: 2012	37 minutes	• 44mm thick European redwood (510kg) door leaf • 7mm Pilkington Pyrodur 30-105 1824mm x 694mm • 15mm high European redwood (510kg) beads with 15 degree chamfer fixed 40mm long x 1.9mm pins 50 from corners and at 150mm centres • 15 x 3mm Zero Seals ceramic fibre tape. Flat glazing beads on side screens
CFR 1611081	Howdens	Cambridge Fire Research	08/11/16	LSASD (RH door only)	1980mm x 837mm x 44mm	BS476: Part 22: 1987	33 minutes	• 3no. layers of particleboard (700kg) core+oak veneer = 44mm + 20mm thick oak lipping to vert edges(in 2 pieces)/10mm thick oak to horiz edges • 6no. horizontal grooves formed using 23x6mm Oak(750kg) inserts with 6x4mm 'U' grooves, between vert grooves, 337mm from top/bottom and equally spaced between • 2no. vertical (112mm from sides) for full height (same spec as horiz grooves) • 30mm thick x 108mm deep softwood (450kg) door frame with 25mm stop • Frisco Eclipse 102x32mm hinges ref HNG0025 • Howdens Hoppe Arrone tubular latch 60x25mm forend latch + 60x41strike(incl 31x16 tongue) 23/15/72.5mm body • No closer • 15x4mm Astroflame AF1504FO intu, central in frame reveal
TR 20230926 – 001107 Rev A	Rutland UK (with their permission)	United Kingdom Testing and Certification	18/01/24	2x ULSASD (both opening in)	2040mm x 926mm x 44mm	BSEN 1634-1: 2014+A1: 2018	Door A 31mins Door B 29mins*	• Door A - 3no. layers of particleboard (700kg) 15.5/12/15.5mm core + oak veneer = 44mm + 20mm thick oak lipping to vert edges(in 2 pieces)/10mm thick oak to horiz edges • Door B - 3no. layers of 13mm particleboard (700kg) core+2.5mm MDF faces = 44mm + 18mm thick hardwood lipping to vert edges(solid)/13mm thick to horiz edges • 6no. vertical+2no. horizontal grooves formed using 12x6mm hardwood(750kg) inserts with 6x4mm 'U' grooves • Howdens DFR3135 - 30mm thick x 108mm deep softwood (510kg) door frame with 12mm stop. Firestopped with Soudal fire foam capped with Astroflame mastic **Lock 1** – Door A: - Sparka LL1123.SSS 5-lever lock, 115/75/18mm body, 155/25/1.5mm forend, 172/30/1.8 keep + 1mm graphite protection **Lock 1** – Door B: - Sparka LL1119.SSS 5-lever lock, 115/75/18mm body, 155/25/1.5mm forend, 172/30/1.8 keep + 1mm MAP protection **Lock 2** – Door A: - Sparka LL2030.SCP HD tubular latch, 24/75/18mm body, 60/25/1.5mm forend, 64/28/1.5mm keep + 1mm graphite protection

TEST REPORT	TEST SPONSOR	TEST LAB	TEST DATE	CONFIGURATION	LEAF SIZE	TEST STANDARD	RESULT	ITEMS/DETAILS SUPPORTED BY TEST EVIDENCE		
									Door B	- Sparka LL2013.SCP HD tubular latch, 24/75/18mm body, 60/25/1.5mm forend, 64/28/1.5mm keep + 1mm MAP protection
								Lock 3	Door A	- Sparka LL2026.NPL tubular latch, 24/75/18mm body, 60/25/1.5mm forend, 56/23/1.5mm keep + 1mm graphite protection
									Door B	- Sparka LL2011.NPL tubular latch, 24/75/18mm body, 60/25/1.5mm forend, 56/23/1.5mm keep + 1mm MAP protection
								• Sparka handles HA1422.SSS Jennie/HA1413.SCP Hugo/HA1423.SSS Duanne • Sparka HA1020 escutcheon • Sparka 102x30mm hinges ref HG1026.SSS + 1mm graphite • Rutland TS.5204 + TS.3204 and surface mounted overhead closers • 15x4mm Lorient graphite based intumescent, central in frame reveal		

*Premature failure occurred at 29minutes but the failure can be assessed through the incorporation of additional intumescent protection to the strike plate box of the primary lock